Memo

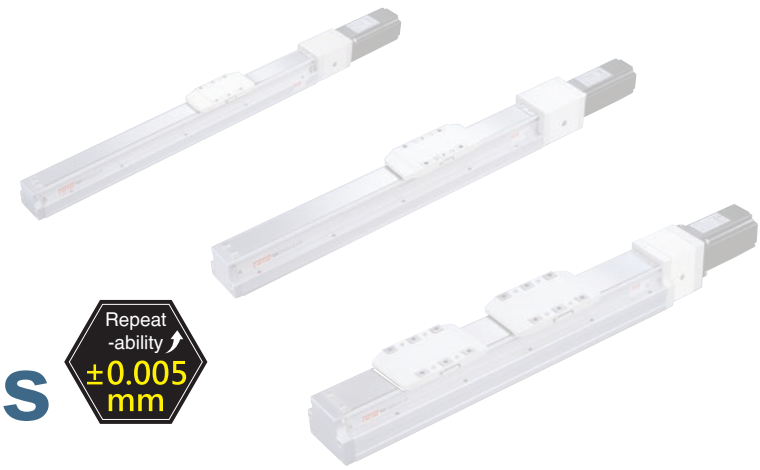

GCH Series

Repeat -ability ±0.005 mm

Clean Room Type
Integrated Linear Bearing Ball Screw Actuator

CONTENTS

Standard/Ball Screw

SMALL
GCH4

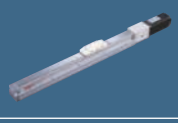

Width 44mm
Max. stroke 1000mm 325
Max. payload 25kg

SMALL
GCH5

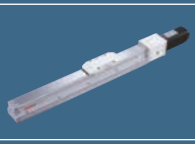

Width 54mm
Max. stroke 1050mm 333
Max. payload 30kg

MEDIUM
GCH8

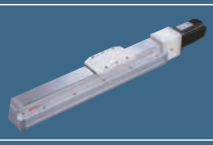

Width 82mm
Max. stroke 1250mm 337
Max. payload 50kg

LARGE
GCH12

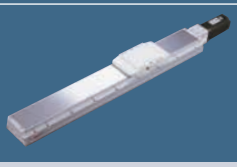

Width 120mm
Max. stroke 1250mm 345
Max. payload 110kg

Dual Carriage Synchronous Movement In Reverse Direction

MEDIUM
GCH5S

Width 54mm
Max. stroke 450mm 349
Max. payload 30kg

MEDIUM
GCH8S

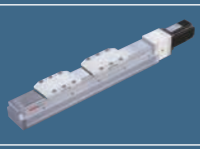

Width 82mm
Max. stroke 525mm 353
Max. payload 50kg

Inner structure-Integrated linear bearings ball screw actuator

Rigidness improved

Actuator body and carriage are made from steel that can improve the rigidness of body and carriage.

Smaller size

Reduced width that can fitting in the compact environments.

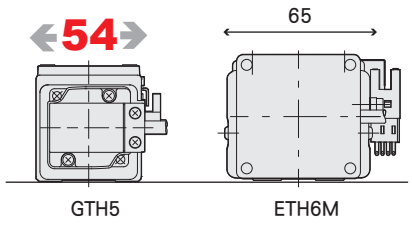

*Compare with ETH series at same condition (30 kg payload).

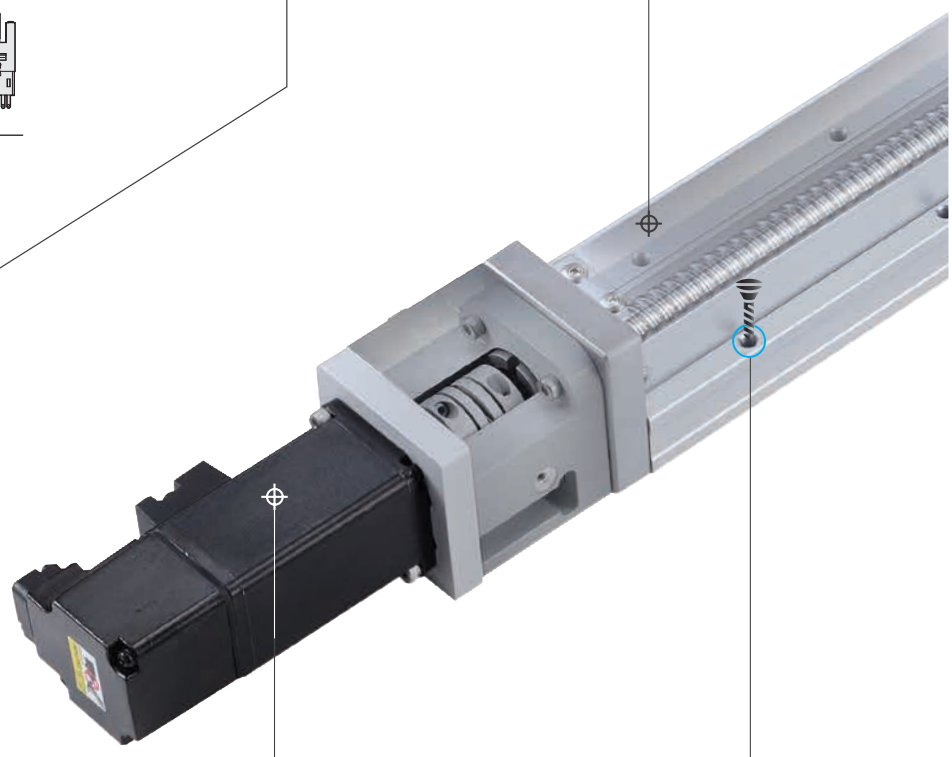

Motor brand

Customer specified servo motor.

Standard suitable motor brands			
Mitsubishi	Panasonic	Yaskawa	Delta

◎Please consult with our sales personnel for other motor specifications.

Motor install options

Multiple motor installation positions provides the flexibility for machine design.

BC Motor Exposed

BL Motor Left Side

BR Motor Right Side

BM Motor Bottom Side

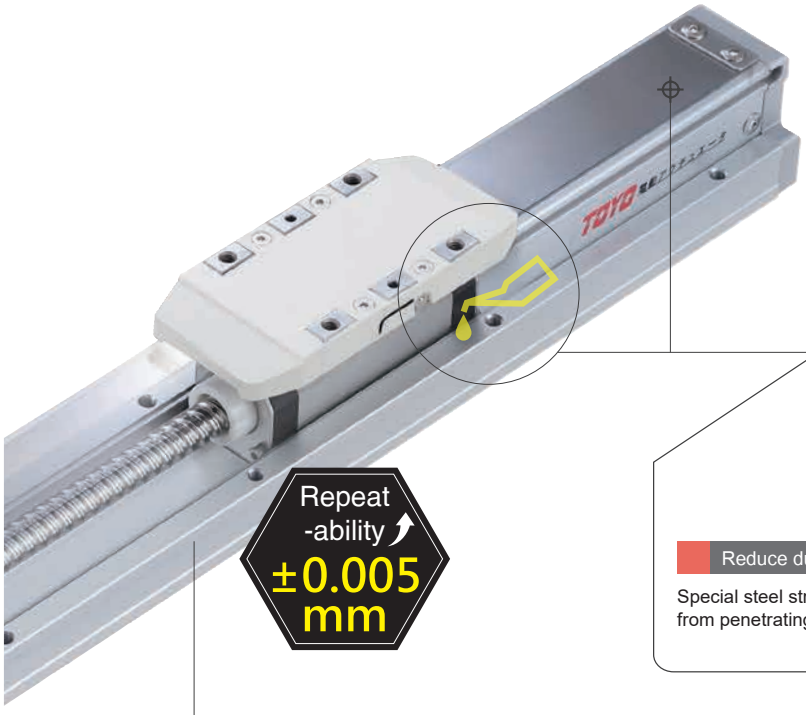

Easy to maintain

External greasing design, easy maintenance without removing the cover.

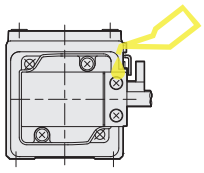

Reduce dust

Special steel strip cover sealing design can prevent dirt and foreign objects from penetrating inside. Can be used in clean room environment.

Flat straightness

Built in linear rail design, straightness and flatness are highly improved to ±0.02mm.

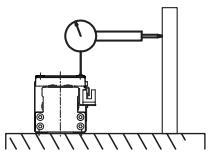

Straightness of GTH5 is ±0.02mm.
*Measure length is 800mm.

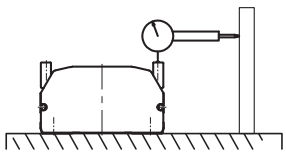

Straightness of ETH10 is ±0.05mm.
*Measure length is 1000mm.

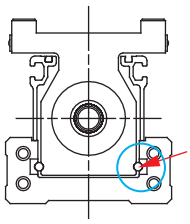

Easy assemble

1.Can be fixed from the top and bottom without removing the cover.

2.Mounting datum plane designed on the side of the body.

3.Built in Pin holes.

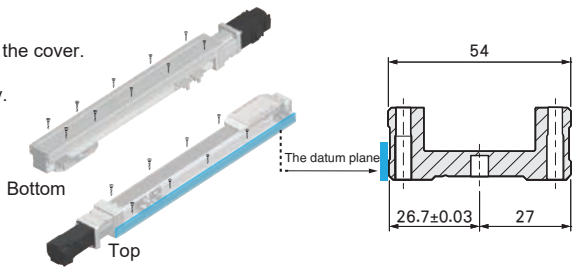

Spec Index of Electric Actuator

GTH Built - in Linear Motion Guide Ball Screw Actuator - Slider Type

Env.	Drive Type	Model No.	Motor Output (w)	Width (mm)	Repeatability (mm)	Ball Screw Spec		Maximum Payload(kg)		Max. Speed*1 (mm/s)
						Outer Dia.(mm)	Lead(mm)	Horizontal	Vertical	
		GCH4	50W	44	±0.005	10	2	25	8	100
							6	20	5	360
							12	12	2	720
			100W				2	25	8	100
							6	20	8	360
							12	12	3.5	720
		GCH5	100W	54	±0.005	12	2	30	10	100
							5	30	10	300
							10	15	5	600
							20	10	2.5	1200
		GCH8	200W	82	±0.005	16	5	50	15	300
							10	30	8	600
			400W				20	18	3	1200
		GCH12	400W	120	±0.005	16	5	110	33	300
							10	88	22	600
							20	40	10	1200
							32	30	8	1920

*1:The highest speed is based on the maximum servo motor's rpm (3000 or 3600).
*2:Max RPM is based on limitations of the ballnut or suggested servo motor limits.
*3:Max speed is based on max RPM of the ballscrew before whipping occurs. This could permanently damage the ballscrew.

Dual Carriage Synchronous Movement In Reverse Direction

Env.	Drive Type	Model No.	Motor Output (w)	Width (mm)	Repeatability (mm)	Ball Screw Spec		Maximum Payload(kg)		Max. Speed*1 (mm/s)
						Outer Dia.(mm)	Lead(mm)	Horizontal	Vertical	
Standard Environment	Ball screw	GCH5S	100W	54	±0.005	12	2	30	10	100
		GCH8S	200W	82	±0.005	16	5	50	15	300
			400W							

*1:The highest speed is based on the maximum servo motor's rpm (3000 or 3600).
*2:Max RPM is based on limitations of the ballnut or suggested servo motor limits.
*3:Max speed is based on max RPM of the ballscrew before whipping occurs. This could permanently damage the ballscrew.

免費服務專線：大陸 China 400-875-0009 台灣 Taiwan 0800-800-893

Stroke(mm) & Maximum Speed(mm/s)*2 — Speed

Stroke	50	100	150	200	250	300	350	400	450	500	550	600	650	700	750	800	850	900	950	1000	1050	1100	1150	1200	1250	1300	1350	Page
				100								90	80	70	60	50	43	40	37	33								325
			360							330	320	270	240	210	180	150	130	120	110	100								
			720							660	640	540	480	420	360	300	260	240	220	200								
				100								90	80	70	60	50	43	40	37	33								
			360							330	320	270	240	210	180	150	130	120	110	100								
			720							660	640	540	480	420	360	300	260	240	220	200								
				100									90	80	70	60	50	47	40	37	33							333
			300								292	250	225	200	175	150	125	117	100	92	83							
			600								583	500	450	400	350	300	250	233	200	183	167							
			1200								1167	1000	900	800	700	600	500	467	400	367	333							
				300									292	250	225	200	175	150	133	117	108	100	92	83				337
				600									583	500	450	400	350	300	267	233	217	200	183	167				
				1200									1167	1000	900	800	700	600	533	467	433	400	367	333				
					300										275	250	225	200	175	167	158	142	133	125	117			345
					600										550	500	450	400	350	333	317	283	267	250	233			
					1200										1100	1000	900	800	700	667	633	567	533	500	467			
					1920										1760	1600	1440	1280	1120	1067	1013	907	853	800	747			

Stroke(mm) & Maximum Speed(mm/s)*2 — Speed

Stroke	25	100	150	200	250	300	350	400	450	500	525	600	650	700	750	800	850	900	950	1000	1050	1100	1150	1200	1250	1300	1350	Page
			100																									349
				300																								353

GCH4

▶ Integrated Linear Bearing ▶ Ball Screw Drive

Please consult our company website for a detailed description on selection requirements and nominal life calculations.

Ordering Method

GCH4 - L2 - 100 - BC - M05B - C4 - 0001

Model

Special Order No.

Stroke

50-1000mm
50mm increments

Ball Screw Lead

2	2mm
6	6mm
12	12mm

Motor Position

BC	Motor Exposed
BM	Motor Bottom Side
BL	Motor Left Side
BR	Motor Right Side
- *4	No Motor Position

Attachment kit for motor

With Attachment kit				
M	Mitsubishi	05	50W	B*3
P	Panasonic	10	–	
Y	Yaskawa	20	–	
T	Delta	40	–	
35M500	35□ Shaft Ø5			
35M500A	35□ Shaft Ø5 *2			
42M500	42□ Shaft Ø5			
42M500A	42□ Shaft Ø5 *2			
X	Others *1			
Without Attachment kit				
K	No Motor Flange & Coupling *4			

*1 When choosing non-standard motor X, the motor spec must be provided and confirmed by TOYO for installation before the order is established.

*2 Please refer to description on page 465.

*3 If No Brake,No Description.

*4 When K is selected the motor position section is left blank.

Home Sensor

Outside	
C	Motor Side
D	Opposite Motor Side
No Sensor	
E	No Sensor

*When the stroke is 50mm, the sensor installation has the following restrictions:

1.The home sensor and the limit sensor must be installed on different sides of the body.

2.The sensor trigger device must be installed on both sides of the device.

Limit Sensor

Outside	
3	1 Pc
4	2 Pc
No Sensor	
5	No Sensor

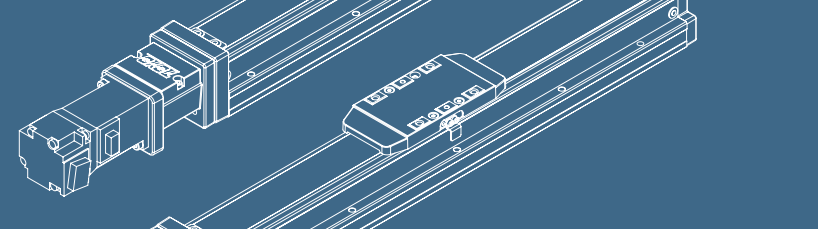

Specification

Item							
Ball screw	Outer dia. & Precision grade		mm	Ø10 & C7		
	Lead		mm	2	6	12
	Maximum Rotating speed※1		rpm	3000	3600	3600
	Maximum linear speed※1		mm/s	100	360	720
	Basic dynamic load rating Ca		N	2265	2537	1740
	Basic static load rating Coa		N	4839	4569	3052
	Load factor			1.2	1.35	1.35
Linear Guide	Dynamic horizontal	100 Km of travel	N	4835		
		1000 Km of travel	N	2246		
		10000 Km of travel	N	1040		
	Static horizontal		N	12678		
Fixed bearing	Basic dynamic load rating Cr		N	1730		
	Static load rating Cor		N	3800		
Common Spec	Repeatability		mm	±0.005		
	Start torpue		N.cm	2		
	Allowable input torque		N.m	1.1		
	Maximum acceleration		m/s^2	10		
	Friction coefficient			0.03		
	Stroke (increments)		mm	50-1000 (50 increments)		
	Ambient temperature※2		°C	0~+40		

※1 The maximum rotating and linear speed has changed due to differences in the lead. The ball screw has a slightly axial runout with a longer stroke and the speed must turn down. (Please read the diagram below for dimensions of the linear speed)
※2 For extreme temperatures: -20C ~80C special greases are required.

Static Loading Moment

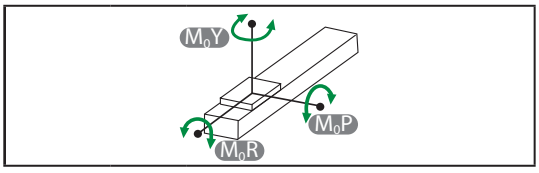

M_0Y	N.m	79
M_0P	N.m	79
M_0R	N.m	116

Dynamic Loading Moment

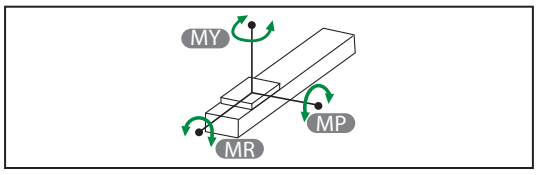

Travel	km	100	1000	10000
MY	N.m	24.9	11.6	5.4
MP	N.m	24.9	11.6	5.4
MR	N.m	37.5	17.4	8.1

Parts list

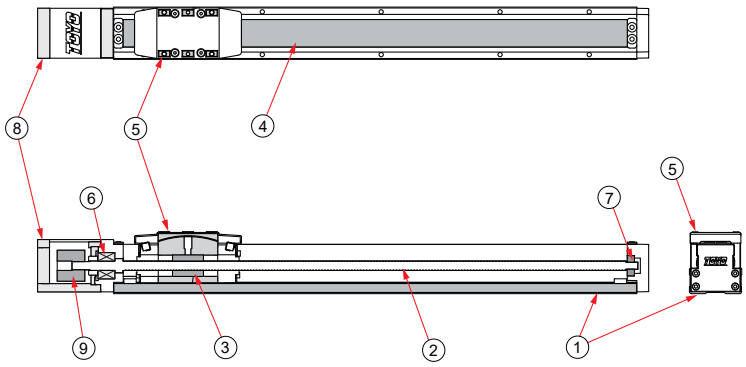

No.	Part Description	Material
1	Base Extrusion	AL6463
2	Ball Screw	S45C
3	Ball Screw Nut	S45C
4	Steel Band	SUS430
5	Carriage	SNCM21H
6	Ball Bearing Dual Arrangement	SUJ2
7	Ball Bearing	SUJ2
8	Fixed Support Block-Inline Motor Mounting Bracket	AL6061
9	Coupling- Clamping	AL6061

BC Motor Inside

2D CAD 3D CAD Download CAD data at www.toyorobot.com

Unit : mm

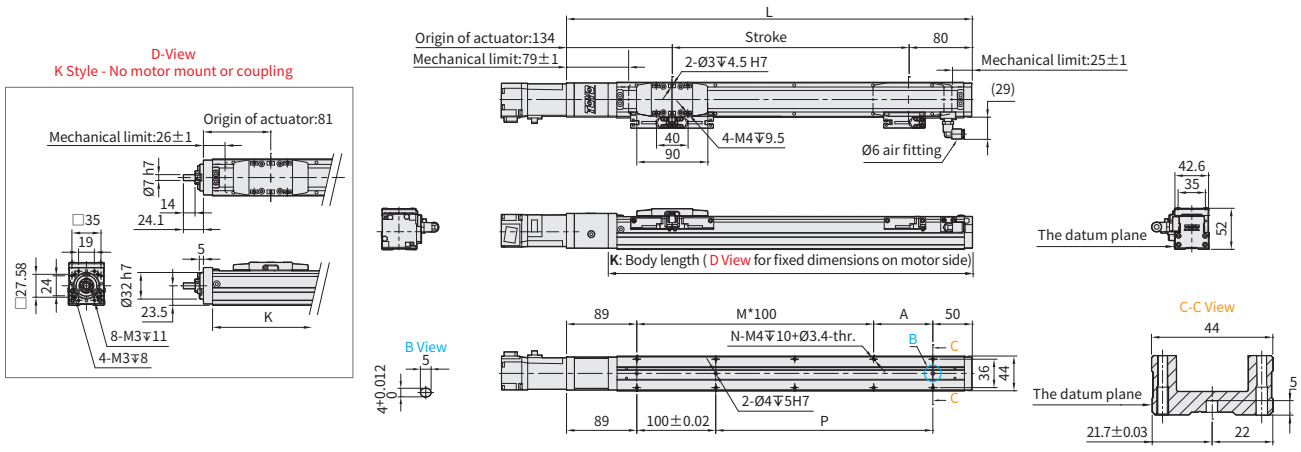

Stroke		50※2	100	150	200	250	300	350	400	450	500	550	600	650	700	750	800	850	900	950	1000
Limit Stroke (±1)		70	120	170	220	270	320	370	420	470	520	570	620	670	720	770	820	870	920	970	1020
L		264	314	364	414	464	514	564	614	664	714	764	814	864	914	964	1014	1064	1114	1164	1214
A		25	75	25	75	25	75	25	75	25	75	25	75	25	75	25	75	25	75	25	75
M		1	1	2	2	3	3	4	4	5	5	6	6	7	7	8	8	9	9	10	10
N		6	6	8	8	10	10	12	12	14	14	16	16	18	18	20	20	22	22	24	24
P		25	75	125	175	225	275	325	375	425	475	525	575	625	675	725	775	825	875	925	975
KG※1		1. 25	1. 42	1. 59	1. 77	1. 95	2. 13	2. 31	2. 49	2. 67	2. 85	3. 03	3. 21	3. 29	3. 57	3. 75	3. 93	4. 11	4. 29	4. 47	4. 65
K		211	261	311	361	411	461	511	561	611	661	711	761	811	861	911	961	1011	1061	1111	1161
Linear Speed mm/s	Lead 2	100											90	80	70	60	50	43	40	37	33
	Lead 6	360									330	320	270	240	210	180	150	130	120	110	100
	Lead 12	720									660	640	540	480	420	360	300	260	240	220	200

※1 KG refers to the weight with motor related accessories (excluding motor), not corresponding to K Type.
※2 When the stroke is 50mm, if fixing the body from the top to the bottom, the fixing hole will be blocked by slider and only can be uses 4 screws to fix;as a result, suggest that fixing actuator body from the bottom to the top.
*When sensor select is D4(Origin sensor is placed at Holder end), vacuum pressure connector is installed on opposite side.

BM Motor Bottom Side

2D CAD 3D CAD Download CAD data at www.toyorobot.com

Unit : mm

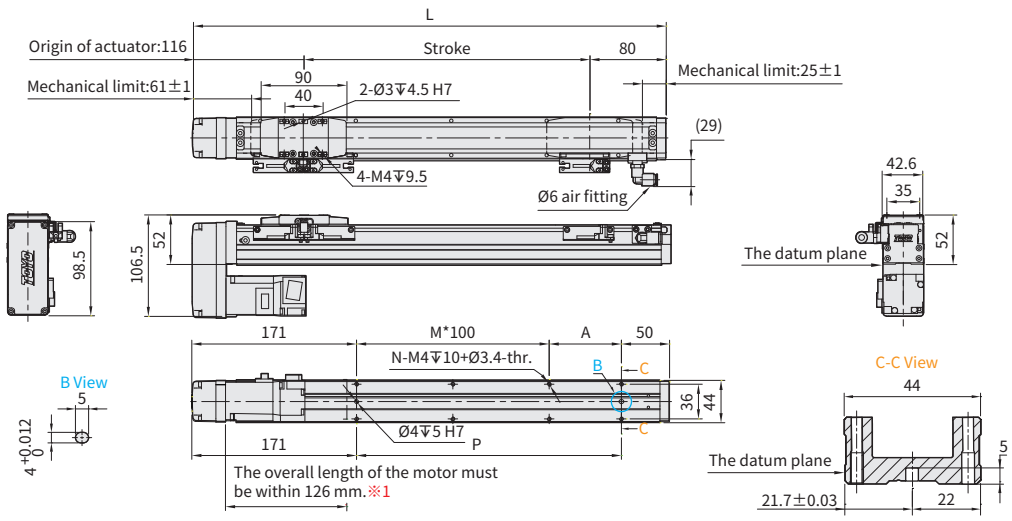

Stroke		50※2	100	150	200	250	300	350	400	450	500	550	600	650	700	750	800	850	900	950	1000
Limit Stroke (±1)		70	120	170	220	270	320	370	420	470	520	570	620	670	720	770	820	870	920	970	1020
L		246	296	346	396	446	496	546	596	646	696	746	796	846	896	946	996	1046	1096	1146	1196
A		25	75	25	75	25	75	25	75	25	75	25	75	25	75	25	75	25	75	25	75
M		0	0	1	1	2	2	3	3	4	4	5	5	6	6	7	7	8	8	9	9
N		4	4	6	6	8	8	10	10	12	12	14	14	16	16	18	18	20	20	22	22
P		25	75	125	175	225	275	325	375	425	475	525	575	625	675	725	775	825	875	925	975
KG		1. 34	1. 52	1. 7	1. 88	2. 06	2. 24	2. 42	2. 6	2. 78	2. 96	3. 14	3. 32	3. 5	3. 68	3. 86	4. 04	4. 22	4. 4	4. 58	4. 76
Linear Speed mm/s	Lead 2	100											90	80	70	60	50	43	40	37	33
	Lead 6	360									330	320	270	240	210	180	150	130	120	110	100
	Lead 12	720									660	640	540	480	420	360	300	260	240	220	200

※1 When motor with brake assembled on lower side, or the total length over than spec limit, it may not use standard pinhole. Please contact our sales department if you need more information & requirement.
※2 When the stroke is 50mm, if fixing the body from the top to the bottom, the fixing hole will be blocked by slider and only can be uses 4 screws to fix;as a result, suggest that fixing actuator body from the bottom to the top.
*When sensor select is D4(Origin sensor is placed at Holder end), vacuum pressure connector is installed on opposite side.

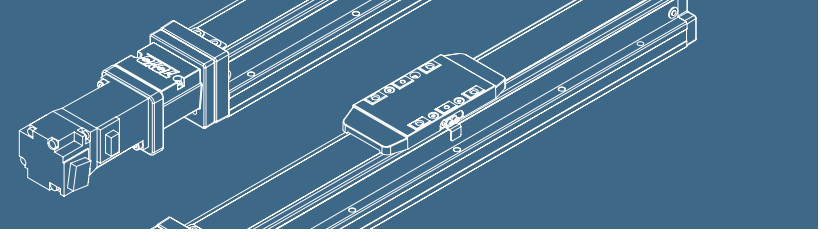

BL Motor Left Side

2D CAD 3D CAD Download CAD data at www.toyorobot.com

Unit : mm

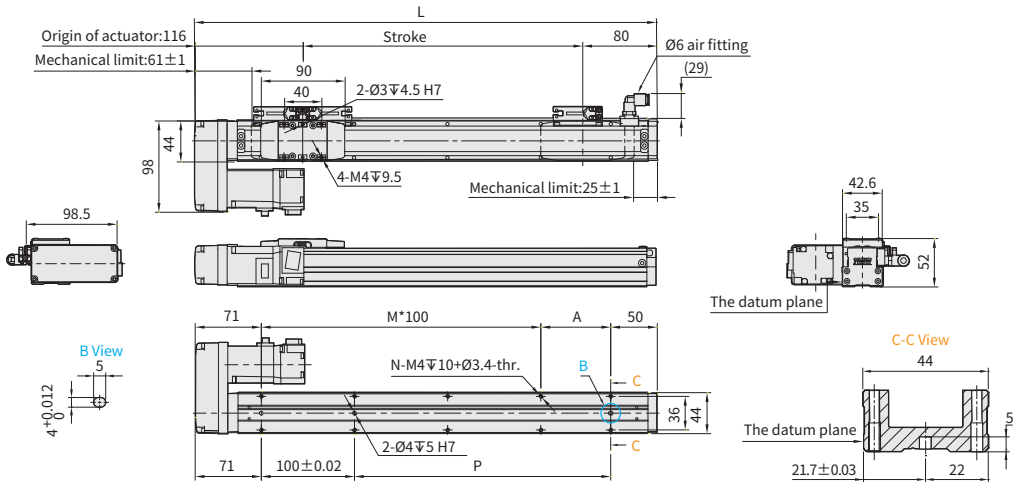

Stroke		50※2	100	150	200	250	300	350	400	450	500	550	600	650	700	750	800	850	900	950	1000
Limit Stroke (±1)		70	120	170	220	270	320	370	420	470	520	570	620	670	720	770	820	870	920	970	1020
L		246	296	346	396	446	496	546	596	646	696	746	796	846	896	946	996	1046	1096	1146	1196
A		25	75	25	75	25	75	25	75	25	75	25	75	25	75	25	75	25	75	25	75
M		1	1	2	2	3	3	4	4	5	5	6	6	7	7	8	8	9	9	10	10
N		6	6	8	8	10	10	12	12	14	14	16	16	18	18	20	20	22	22	24	24
P		25	75	125	175	225	275	325	375	425	475	525	575	625	675	725	775	825	875	925	975
KG		1.34	1.52	1.7	1.88	2.06	2.24	2.42	2.6	2.78	2.96	3.14	3.32	3.5	3.68	3.86	4.04	4.22	4.4	4.58	4.76
Linear Speed mm/s	Lead 2	100											90	80	70	60	50	43	40	37	33
	Lead 6	360									330	320	270	240	210	180	150	130	120	110	100
	Lead 12	720									660	640	540	480	420	360	300	260	240	220	200

※2 When the stroke is 50mm, if fixing the body from the top to the bottom, the fixing hole will be blocked by slider and only can be uses 4 screws to fix;as a result, suggest that fixing actuator body from the bottom to the top.
*When sensor select is D4(Origin sensor is placed at Holder end), vacuum pressure connector is installed on opposite side.

BR Motor Right Side

2D CAD 3D CAD Download CAD data at www.toyorobot.com

Unit : mm

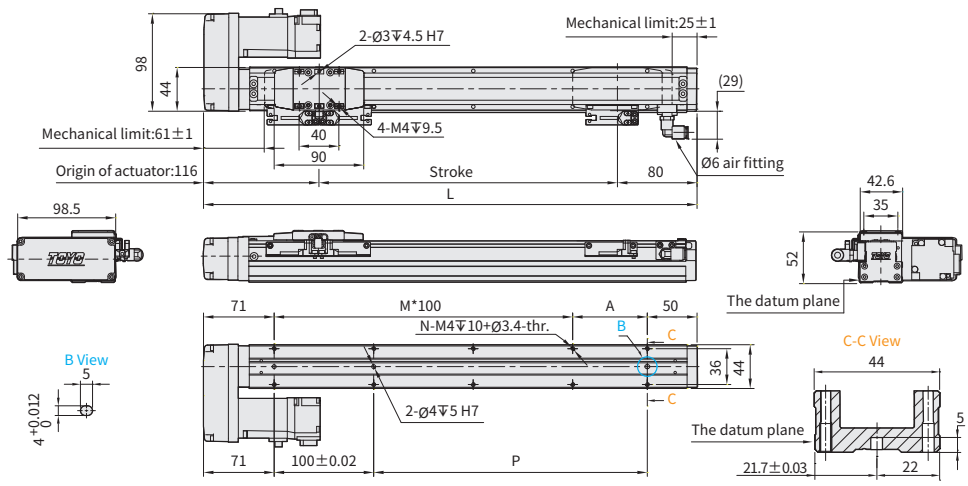

Stroke		50※2	100	150	200	250	300	350	400	450	500	550	600	650	700	750	800	850	900	950	1000
Limit Stroke (±1)		70	120	170	220	270	320	370	420	470	520	570	620	670	720	770	820	870	920	970	1020
L		246	296	346	396	446	496	546	596	646	696	746	796	846	896	946	996	1046	1096	1146	1196
A		25	75	25	75	25	75	25	75	25	75	25	75	25	75	25	75	25	75	25	75
M		1	1	2	2	3	3	4	4	5	5	6	6	7	7	8	8	9	9	10	10
N		6	6	8	8	10	10	12	12	14	14	16	16	18	18	20	20	22	22	24	24
P		25	75	125	175	225	275	325	375	425	475	525	575	625	675	725	775	825	875	925	975
KG		1.34	1.52	1.7	1.88	2.06	2.24	2.42	2.6	2.78	2.96	3.14	3.32	3.5	3.68	3.86	4.04	4.22	4.4	4.58	4.76
Linear Speed mm/s	Lead 2	100											90	80	70	60	50	43	40	37	33
	Lead 6	360									330	320	270	240	210	180	150	130	120	110	100
	Lead 12	720									660	640	540	480	420	360	300	260	240	220	200

※2 When the stroke is 50mm, if fixing the body from the top to the bottom, the fixing hole will be blocked by slider and only can be uses 4 screws to fix;as a result, suggest that fixing actuator body from the bottom to the top.
*When sensor select is D4(Origin sensor is placed at Holder end), vacuum pressure connector is installed on opposite side.

GCH4

▶ Integrated Linear Bearing ▶ Ball Screw Drive

Please consult our company website for a detailed description on selection requirements and nominal life calculations.

Ordering Method

GCH4 - L2 - 100 - BC - M10B - C4 - 0001

Model

Special Order No.

Stroke

50-1000mm
50mm increments

Ball Screw Lead

2	2mm
6	6mm
12	12mm

Motor Position

BC	Motor Exposed
BM	Motor Bottom Side
BL	Motor Left Side
BR	Motor Right Side
- *4	No Motor Position

Attachment kit for motor

With Attachment kit				
M	Mitsubishi	05	–	B*3
P	Panasonic	10	100W	
Y	Yaskawa	20	–	
T	Delta	40	–	
35M500	35□ Shaft Ø5			
35M500A	35□ Shaft Ø5*2			
42M500	42□ Shaft Ø5			
42M500A	42□ Shaft Ø5*2			
X	Others *1			
Without Attachment kit				
K	No Motor Flange & Coupling *4			

*1 When choosing non-standard motor X, the motor spec must be provided and confirmed by TOYO for installation before the order is established.

*2 Please refer to description on page 465.

*3 If No Brake,No Description.

*4 When K is selected the motor position section is left blank.

Home Sensor

Outside	
C	Motor Side
D	Opposite Motor Side
No Sensor	
E	No Sensor

*When the stroke is 50mm, the sensor installation has the following restrictions:

1.The home sensor and the limit sensor must be installed on different sides of the body.

2.The sensor trigger device must be installed on both sides of the device.

Limit Sensor

Outside	
3	1 Pc
4	2 Pc
No Sensor	
5	No Sensor

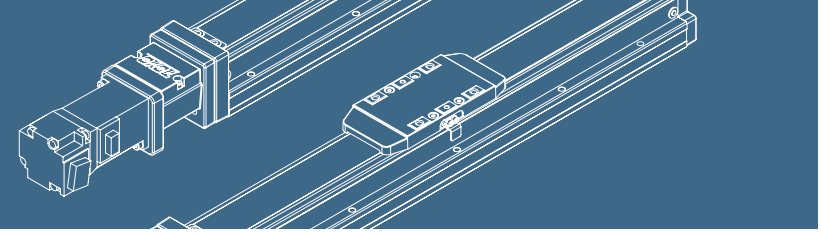

Specification

Item							
Ball screw	Outer dia. & Precision grade		mm	Ø10 & C7		
	Lead		mm	2	6	12
	Maximum Rotating speed※1		rpm	3000	3600	3600
	Maximum linear speed※1		mm/s	100	360	720
	Basic dynamic load rating Ca		N	2265	2537	1740
	Basic static load rating Coa		N	4839	4569	3052
	Load factor			1.2	1.35	1.35
Linear Guide	Dynamic horizontal	100 Km of travel	N	4835		
		1000 Km of travel	N	2246		
		10000 Km of travel	N	1040		
	Static horizontal		N	12678		
Fixed bearing	Basic dynamic load rating Cr		N	1730		
	Static load rating Cor		N	3800		
Common Spec	Repeatability		mm	±0.005		
	Start torpue		N.cm	2		
	Allowable input torque		N.m	1.1		
	Maximum acceleration		m/s^2	10		
	Friction coefficient			0.03		
	Stroke (increments)		mm	50-1000 (50 increments)		
	Ambient temperature※2		°C	0~+40		

※1 The maximum rotating and linear speed has changed due to differences in the lead. The ball screw has a slightly axial runout with a longer stroke and the speed must turn down. (Please read the diagram below for dimensions of the linear speed)
※2 For extreme temperatures: -20C ~80C special greases are required.

Static Loading Moment

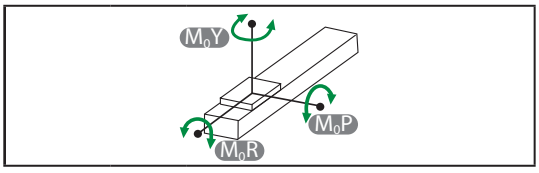

M_0Y	N.m	79
M_0P	N.m	79
M_0R	N.m	116

Dynamic Loading Moment

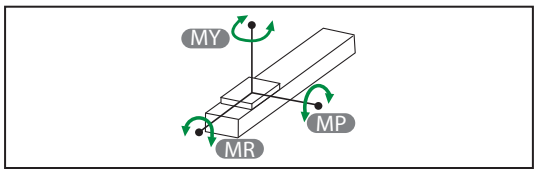

Travel	km	100	1000	10000
MY	N.m	24.9	11.6	5.4
MP	N.m	24.9	11.6	5.4
MR	N.m	37.5	17.4	8.1

Parts list

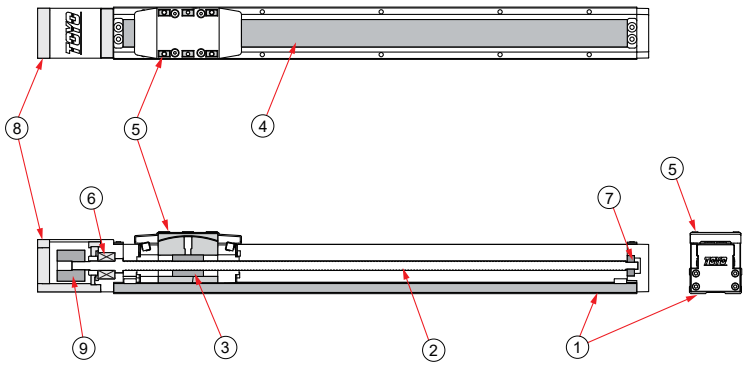

No.	Part Description	Material
1	Base Extrusion	AL6463
2	Ball Screw	S45C
3	Ball Screw Nut	S45C
4	Steel Band	SUS430
5	Carriage	SNCM21H
6	Ball Bearing Dual Arrangement	SUJ2
7	Ball Bearing	SUJ2
8	Fixed Support Block-Inline Motor Mounting Bracket	AL6061
9	Coupling- Clamping	AL6061

BC Motor Inside

2D CAD 3D CAD Download CAD data at www.toyorobot.com

Unit : mm

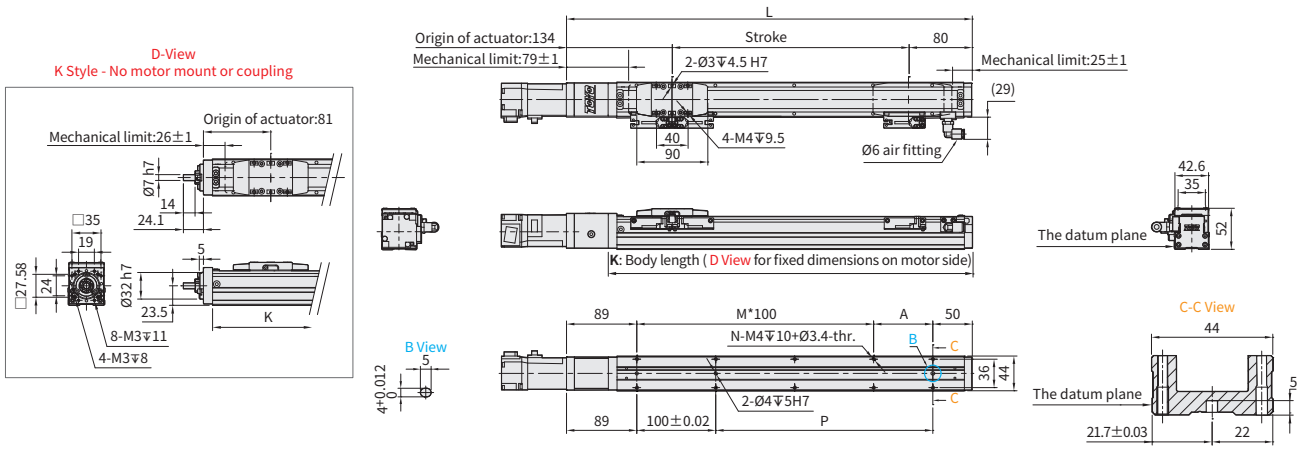

Stroke		50※2	100	150	200	250	300	350	400	450	500	550	600	650	700	750	800	850	900	950	1000
Limit Stroke (±1)		70	120	170	220	270	320	370	420	470	520	570	620	670	720	770	820	870	920	970	1020
L		264	314	364	414	464	514	564	614	664	714	764	814	864	914	964	1014	1064	1114	1164	1214
A		25	75	25	75	25	75	25	75	25	75	25	75	25	75	25	75	25	75	25	75
M		1	1	2	2	3	3	4	4	5	5	6	6	7	7	8	8	9	9	10	10
N		6	6	8	8	10	10	12	12	14	14	16	16	18	18	20	20	22	22	24	24
P		25	75	125	175	225	275	325	375	425	475	525	575	625	675	725	775	825	875	925	975
KG※1		1. 25	1. 42	1. 59	1. 77	1. 95	2. 13	2. 31	2. 49	2. 67	2. 85	3. 03	3. 21	3. 29	3. 57	3. 75	3. 93	4. 11	4. 29	4. 47	4. 65
K		211	261	311	361	411	461	511	561	611	661	711	761	811	861	911	961	1011	1061	1111	1161
Linear Speed mm/s	Lead 2	100											90	80	70	60	50	43	40	37	33
	Lead 6	360									330	320	270	240	210	180	150	130	120	110	100
	Lead 12	720									660	640	540	480	420	360	300	260	240	220	200

※1 KG refers to the weight with motor related accessories (excluding motor), not corresponding to K Type.
※2 When the stroke is 50mm, if fixing the body from the top to the bottom, the fixing hole will be blocked by slider and only can be uses 4 screws to fix;as a result, suggest that fixing actuator body from the bottom to the top.
*When sensor select is D4(Origin sensor is placed at Holder end), vacuum pressure connector is installed on opposite side.

BM Motor Bottom Side

2D CAD 3D CAD Download CAD data at www.toyorobot.com

Unit : mm

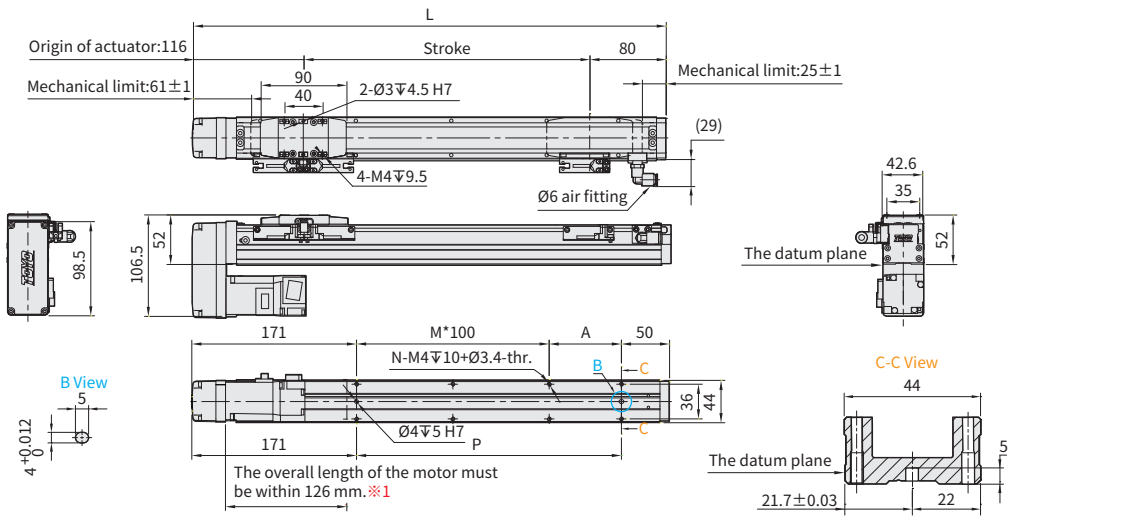

Stroke		50※2	100	150	200	250	300	350	400	450	500	550	600	650	700	750	800	850	900	950	1000
Limit Stroke (±1)		70	120	170	220	270	320	370	420	470	520	570	620	670	720	770	820	870	920	970	1020
L		246	296	346	396	446	496	546	596	646	696	746	796	846	896	946	996	1046	1096	1146	1196
A		25	75	25	75	25	75	25	75	25	75	25	75	25	75	25	75	25	75	25	75
M		0	0	1	1	2	2	3	3	4	4	5	5	6	6	7	7	8	8	9	9
N		4	4	6	6	8	8	10	10	12	12	14	14	16	16	18	18	20	20	22	22
P		25	75	125	175	225	275	325	375	425	475	525	575	625	675	725	775	825	875	925	975
KG		1. 34	1. 52	1. 7	1. 88	2. 06	2. 24	2. 42	2. 6	2. 78	2. 96	3. 14	3. 32	3. 5	3. 68	3. 86	4. 04	4. 22	4. 4	4. 58	4. 76
Linear Speed mm/s	Lead 2	100											90	80	70	60	50	43	40	37	33
	Lead 6	360									330	320	270	240	210	180	150	130	120	110	100
	Lead 12	720									660	640	540	480	420	360	300	260	240	220	200

※1 When motor with brake assembled on lower side, or the total length over than spec limit, it may not use standard pinhole. Please contact our sales department if you need more information & requirement.
※2 When the stroke is 50mm, if fixing the body from the top to the bottom, the fixing hole will be blocked by slider and only can be uses 4 screws to fix;as a result, suggest that fixing actuator body from the bottom to the top.
*When sensor select is D4(Origin sensor is placed at Holder end), vacuum pressure connector is installed on opposite side.

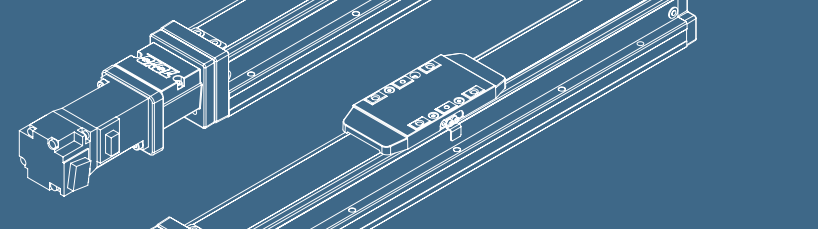

BL Motor Left Side

2D CAD 3D CAD Download CAD data at www.toyorobot.com

Unit : mm

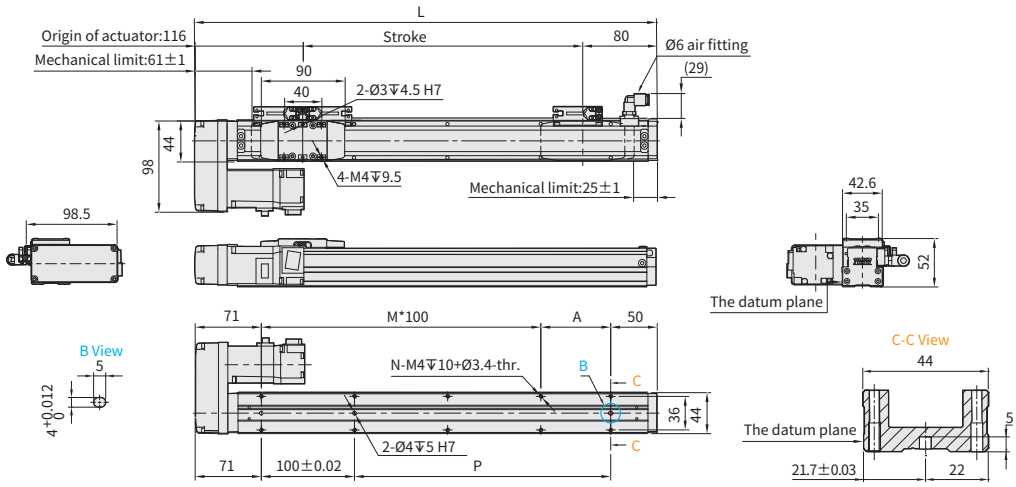

Stroke		50※2	100	150	200	250	300	350	400	450	500	550	600	650	700	750	800	850	900	950	1000
Limit Stroke (±1)		70	120	170	220	270	320	370	420	470	520	570	620	670	720	770	820	870	920	970	1020
L		246	296	346	396	446	496	546	596	646	696	746	796	846	896	946	996	1046	1096	1146	1196
A		25	75	25	75	25	75	25	75	25	75	25	75	25	75	25	75	25	75	25	75
M		1	1	2	2	3	3	4	4	5	5	6	6	7	7	8	8	9	9	10	10
N		6	6	8	8	10	10	12	12	14	14	16	16	18	18	20	20	22	22	24	24
P		25	75	125	175	225	275	325	375	425	475	525	575	625	675	725	775	825	875	925	975
KG		1.34	1.52	1.7	1.88	2.06	2.24	2.42	2.6	2.78	2.96	3.14	3.32	3.5	3.68	3.86	4.04	4.22	4.4	4.58	4.76
Linear Speed mm/s	Lead 2	100											90	80	70	60	50	43	40	37	33
	Lead 6	360									330	320	270	240	210	180	150	130	120	110	100
	Lead 12	720									660	640	540	480	420	360	300	260	240	220	200

※2 When the stroke is 50mm, if fixing the body from the top to the bottom, the fixing hole will be blocked by slider and only can be uses 4 screws to fix;as a result, suggest that fixing actuator body from the bottom to the top.
*When sensor select is D4(Origin sensor is placed at Holder end), vacuum pressure connector is installed on opposite side.

BR Motor Right Side

2D CAD 3D CAD Download CAD data at www.toyorobot.com

Unit : mm

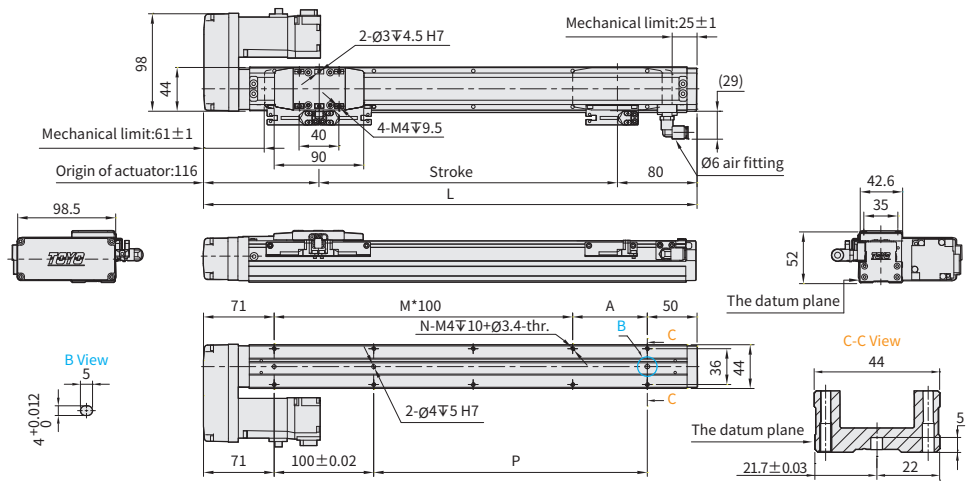

Stroke		50※2	100	150	200	250	300	350	400	450	500	550	600	650	700	750	800	850	900	950	1000
Limit Stroke (±1)		70	120	170	220	270	320	370	420	470	520	570	620	670	720	770	820	870	920	970	1020
L		246	296	346	396	446	496	546	596	646	696	746	796	846	896	946	996	1046	1096	1146	1196
A		25	75	25	75	25	75	25	75	25	75	25	75	25	75	25	75	25	75	25	75
M		1	1	2	2	3	3	4	4	5	5	6	6	7	7	8	8	9	9	10	10
N		6	6	8	8	10	10	12	12	14	14	16	16	18	18	20	20	22	22	24	24
P		25	75	125	175	225	275	325	375	425	475	525	575	625	675	725	775	825	875	925	975
KG		1.34	1.52	1.7	1.88	2.06	2.24	2.42	2.6	2.78	2.96	3.14	3.32	3.5	3.68	3.86	4.04	4.22	4.4	4.58	4.76
Linear Speed mm/s	Lead 2	100											90	80	70	60	50	43	40	37	33
	Lead 6	360									330	320	270	240	210	180	150	130	120	110	100
	Lead 12	720									660	640	540	480	420	360	300	260	240	220	200

※2 When the stroke is 50mm, if fixing the body from the top to the bottom, the fixing hole will be blocked by slider and only can be uses 4 screws to fix;as a result, suggest that fixing actuator body from the bottom to the top.
*When sensor select is D4(Origin sensor is placed at Holder end), vacuum pressure connector is installed on opposite side.

GCH5

▶ Integrated Linear Bearing ▶ Ball Screw Drive

Please consult our company website for a detailed description on selection requirements and nominal life calculations.

Ordering Method

GCH5 - L 5 - 100 - BC - M10B - C4 - 0001

Model | Special Order No.

Ballscrew Accuracy Grade

L	Rolled Ballscrews
C	Ground Ballscrews

*C precision-level ground ball screws are not available in all stroke lengths, please consult the model datasheet.

Ball Screw Lead

2	2mm
5	5mm
10	10mm
20	20mm

Stroke

Rolled Ballscrews
50-1050mm (50mm increments)
Ground Ballscrews
50-300mm (50mm increments)

Motor Position

BC	Motor Exposed
BM	Motor Bottom Side
BL	Motor Left Side
BR	Motor Right Side
- *4	No Motor Position

Attachment kit for motor

With Attachment kit				
M	Mitsubishi	05	–	B*3
P	Panasonic	10	100W	
Y	Yaskawa	20	–	
T	Delta	40	–	
42M500	42□ Shaft Ø5			
42M500A	42□ Shaft Ø5 *2			
57M635	57□ Shaft Ø6.35			
57M800	57□ Shaft Ø8			
X	Others *1			
Without Attachment kit				
K	No Motor Flange & Coupling *4			

*1 When choosing non-standard motor X, the motor spec must be provided and confirmed by TOYO for installation before the order is established.

*2 Please refer to description on page 465.

*3 If No Brake,No Description.

*4 When K is selected the motor position section is left blank.

Home Sensor

Outside	
C	Motor Side
D	Opposite Motor Side
No Sensor	
E	No Sensor

*When the stroke is 50mm, the sensor installation has the following restrictions:

1.The home sensor and the limit sensor must be installed on different sides of the body.

2.The sensor trigger device must be installed on both sides of the device.

Limit Sensor

Outside	
3	1 Pc
4	2 Pc
No Sensor	
5	No Sensor

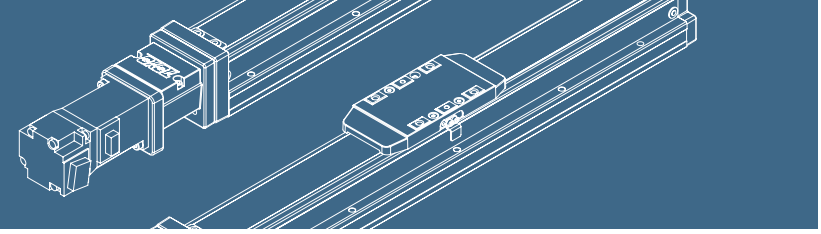

Specification

Item	Ball Screw Spec.	Ballscrew Accuracy Grade Code		L	C
		Ballscrew Accuracy Grade		C7 Rolled Ballscrews	C5 Ground Ballscrews
		Repeatability	mm	±0.005	±0.003
		Stroke (increments)	mm	50-1050mm (50 increments)	50-300mm (50 increments)

Item	Ball screw	Outer dia. & Precision grade	mm	ø12			
		Lead	mm	2	5	10	20
		Maximum Rotating speed※1	rpm	3000	3600	3600	3600
		Maximum linear speed※1	mm/s	100	300	600	1200
		Basic dynamic load rating Ca	N	2411	4829	4680	11284
		Basic static load rating Coa	N	5779	7836	7649	20410
		Load factor		1.2	1.2	1.35	1.35
	Linear Guide	Dynamic horizontal: 100 Km of travel	N	5904			
		Dynamic horizontal: 1000 Km of travel	N	2736			
		Dynamic horizontal: 10000 Km of travel	N	1275			
		Static horizontal	N	16904			
	Fixed bearing	Basic dynamic load rating Cr	N	1730			
		Static load rating Cor	N	3800			
	Common Spec	Start torpue	N.cm	7			
		Allowable input torque	N.m	1.1			
		Maximum acceleration	m/s^2	10			
		Friction coefficient		0.03			
		Ambient temperature※2	°C	0~+40			

※1 The maximum rotating and linear speed has changed due to differences in the lead. The ball screw has a slightly axial runout with a longer stroke and the speed must turn down. (Please read the diagram below for dimensions of the linear speed)
※2 For extreme temperatures: -20C ~80C special greases are required.

Static Loading Moment

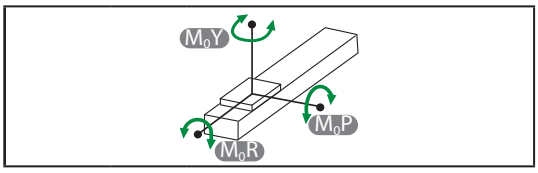

M_0Y	N.m	103
M_0P	N.m	103
M_0R	N.m	144

Dynamic Loading Moment

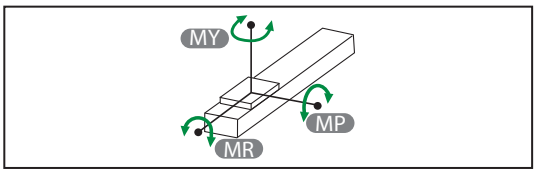

Travel	km	100	1000	10000
MY	N.m	40.8	18.9	8.8
MP	N.m	40.8	18.9	8.8
MR	N.m	58.5	27.2	12.6

Parts list

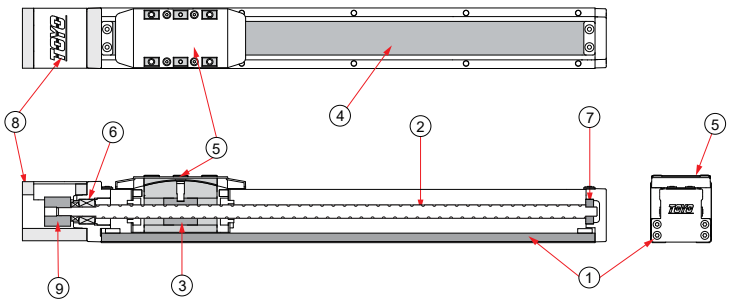

No.	Part Description	Material
1	Base Extrusion	AL6463
2	Ball Screw	S45C
3	Ball Screw Nut	S45C
4	Steel Band	SUS430
5	Carriage	SNCM21H
6	Ball Bearing Dual Arrangement	SUJ2
7	Ball Bearing	SUJ2
8	Fixed Support Block-Inline Motor Mounting Bracket	AL6061
9	Coupling- Clamping	AL6061

BC Motor Inside

2D CAD 3D CAD

Download CAD data at www.toyorobot.com

Unit : mm

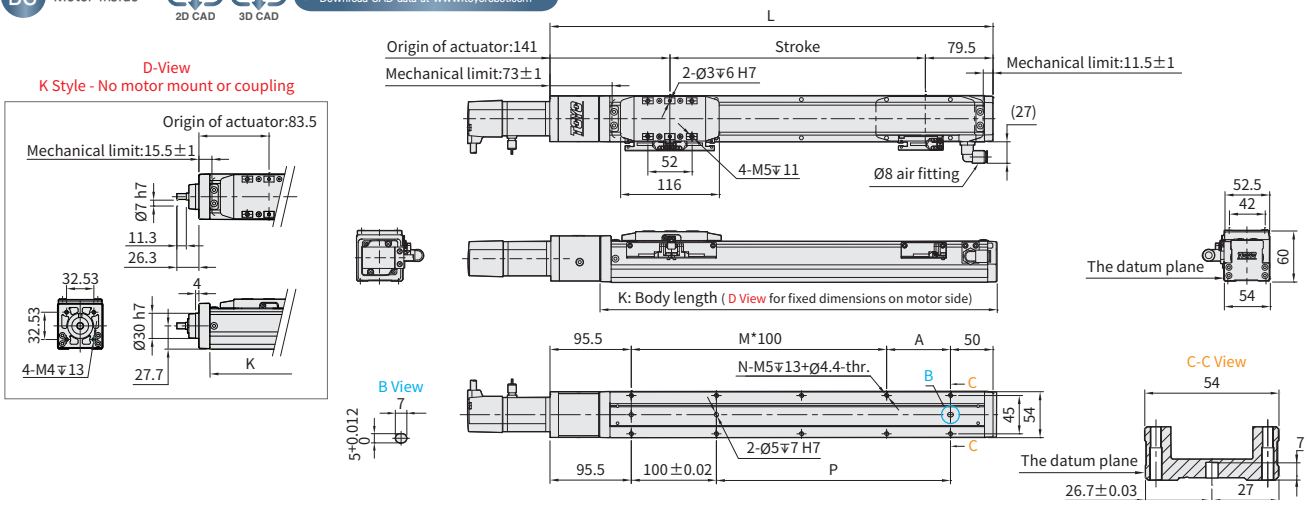

Stroke		50※2	100	150	200	250	300	350	400	450	500	550	600	650	700	750	800	850	900	950	1000	1050
Limit Stroke (±1)		70	120	170	220	270	320	370	420	470	520	570	620	670	720	770	820	870	920	970	1020	1070
L		270. 5	320. 5	370. 5	420. 5	470. 5	520. 5	570. 5	620. 5	670. 5	720. 5	770. 5	820. 5	870. 5	920. 5	970. 5	1020. 5	1070. 5	1120. 5	1170. 5	1220. 5	1270. 5
A		25	75	25	75	25	75	25	75	25	75	25	75	25	75	25	75	25	75	25	75	25
M		1	1	2	2	3	3	4	4	5	5	6	6	7	7	8	8	9	9	10	10	11
N		6	6	8	8	10	10	12	12	14	14	16	16	18	18	20	20	22	22	24	24	26
P		25	75	125	175	225	275	325	375	425	475	525	575	625	675	725	775	825	875	925	975	1025
KG※1		1. 95	2. 09	2. 22	2. 41	2. 69	2. 8	2. 82	3. 05	3. 16	3. 25	3. 45	3. 58	3. 74	3. 88	4. 01	4. 39	4. 77	5. 15	5. 53	5. 91	6. 29
K		213	263	313	363	413	463	513	563	613	663	713	763	813	863	913	963	1013	1063	1113	1163	1213
Linear Speed mm/s	Lead 2	100												90	80	70	60	50	47	40	37	33
	Lead 5	300										292	250	225	200	175	150	125	117	100	92	83
	Lead 10	600										583	500	450	400	350	300	250	233	200	183	167
	Lead 20	1200										1167	1000	900	800	700	600	500	467	400	367	333

※1 KG refers to the weight with motor related accessories (excluding motor), not corresponding to K Type.
※2 When the stroke is 50mm, if fixing the body from the top to the bottom, the fixing hole will be blocked by slider and only can be uses 4 screws to fix;as a result, suggest that fixing actuator body from the bottom to the top.
*When sensor select is D4(Origin sensor is placed at Holder end), vacuum pressure connector is installed on opposite side.

BM Motor Bottom Side

2D CAD 3D CAD

Download CAD data at www.toyorobot.com

Unit : mm

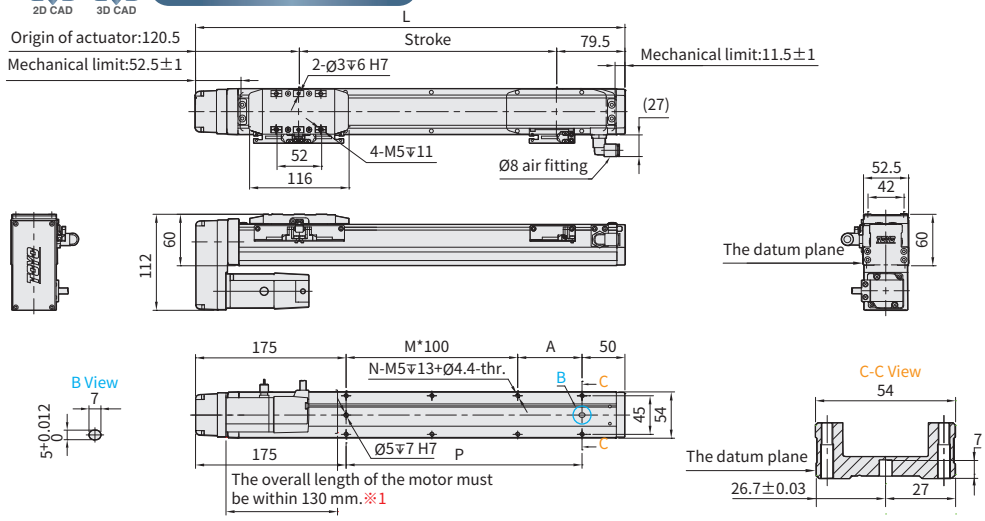

Stroke		50※2	100	150	200	250	300	350	400	450	500	550	600	650	700	750	800	850	900	950	1000	1050
Limit Stroke (±1)		70	120	170	220	270	320	370	420	470	520	570	620	670	720	770	820	870	920	970	1020	1070
L		250	300	350	400	450	500	550	600	650	700	750	800	850	900	950	1000	1050	1100	1150	1200	1250
A		25	75	25	75	25	75	25	75	25	75	25	75	25	75	25	75	25	75	25	75	25
M		0	0	1	1	2	2	3	3	4	4	5	5	6	6	7	7	8	8	9	9	10
N		4	4	6	6	8	8	10	10	12	12	14	14	16	16	18	18	20	20	22	22	24
P		25	75	125	175	225	275	325	375	425	475	525	575	625	675	725	775	825	875	925	975	1025
KG		1. 98	2. 1	2. 33	2. 44	2. 72	2. 83	2. 88	3. 08	3. 19	3. 28	3. 48	3. 61	3. 77	3. 9	4. 04	4. 42	4. 8	5. 18	5. 56	5. 94	6. 32
Linear Speed mm/s	Lead 2	100												90	80	70	60	50	47	40	37	33
	Lead 5	300										292	250	225	200	175	150	125	117	100	92	83
	Lead 10	600										583	500	450	400	350	300	250	233	200	183	167
	Lead 20	1200										1167	1000	900	800	700	600	500	467	400	367	333

※1 When motor with brake assembled on lower side, or the total length over than spec limit, it may not use standard pinhole. Please contact our sales department if you need more information & requirement.
※2 When the stroke is 50mm, if fixing the body from the top to the bottom, the fixing hole will be blocked by slider and only can be uses 4 screws to fix;as a result, suggest that fixing actuator body from the bottom to the top.
*When sensor select is D4(Origin sensor is placed at Holder end), vacuum pressure connector is installed on opposite side.

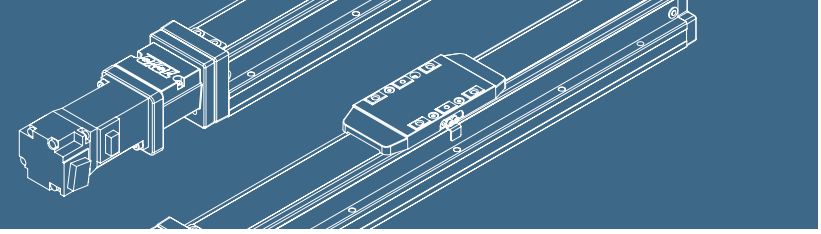

BL Motor Left Side

2D CAD 3D CAD Download CAD data at www.toyorobot.com

Unit : mm

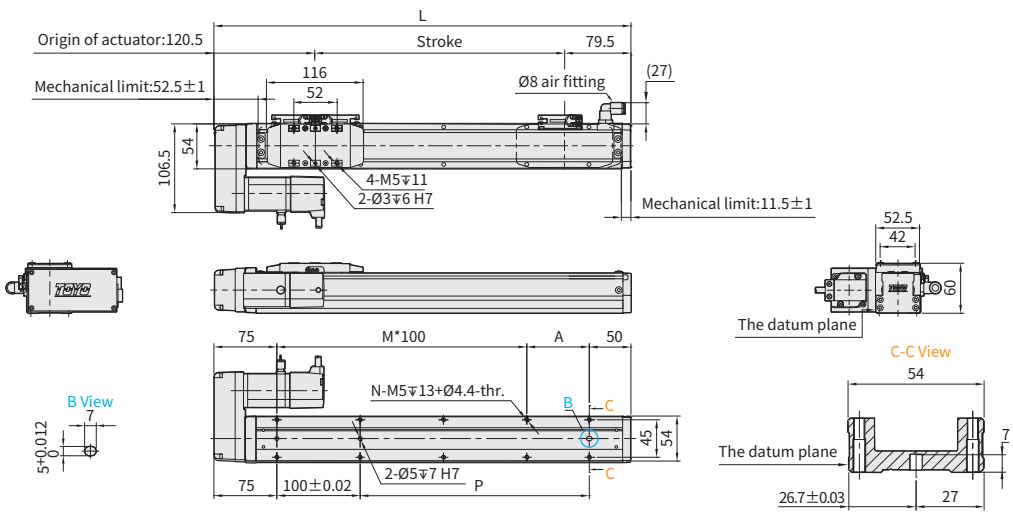

Stroke		50※2	100	150	200	250	300	350	400	450	500	550	600	650	700	750	800	850	900	950	1000	1050
Limit Stroke (±1)		70	120	170	220	270	320	370	420	470	520	570	620	670	720	770	820	870	920	970	1020	1070
L		250	300	350	400	450	500	550	600	650	700	750	800	850	900	950	1000	1050	1100	1150	1200	1250
A		25	75	25	75	25	75	25	75	25	75	25	75	25	75	25	75	25	75	25	75	25
M		1	1	2	2	3	3	4	4	5	5	6	6	7	7	8	8	9	9	10	10	11
N		6	6	8	8	10	10	12	12	14	14	16	16	18	18	20	20	22	22	24	24	26
P		25	75	125	175	225	275	325	375	425	475	525	575	625	675	725	775	825	875	925	975	1025
KG		1.98	2.1	2.33	2.44	2.72	2.83	2.88	3.08	3.19	3.28	3.48	3.61	3.77	3.9	4.04	4.42	4.8	5.18	5.56	5.94	6.32
Linear Speed mm/s	Lead 2	100												90	80	70	60	50	47	40	37	33
	Lead 5	300										292	250	225	200	175	150	125	117	100	92	83
	Lead 10	600										583	500	450	400	350	300	250	233	200	183	167
	Lead 20	1200										1167	1000	900	800	700	600	500	467	400	367	333

※2 When the stroke is 50mm, if fixing the body from the top to the bottom, the fixing hole will be blocked by slider and only can be uses 4 screws to fix;as a result, suggest that fixing actuator body from the bottom to the top.
*When sensor select is D4(Origin sensor is placed at Holder end), vacuum pressure connector is installed on opposite side.

BR Motor Right Side

2D CAD 3D CAD Download CAD data at www.toyorobot.com

Unit : mm

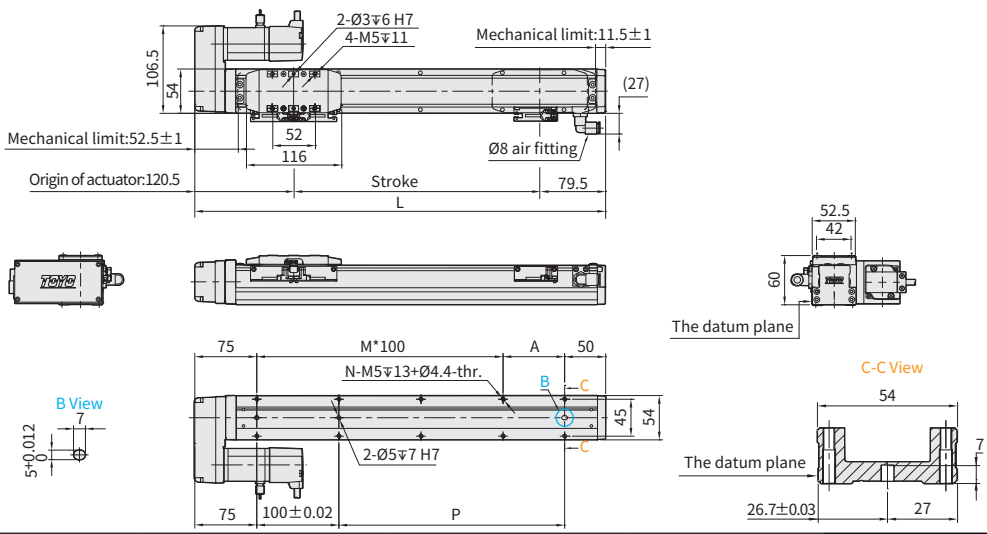

Stroke		50※2	100	150	200	250	300	350	400	450	500	550	600	650	700	750	800	850	900	950	1000	1050
Limit Stroke (±1)		70	120	170	220	270	320	370	420	470	520	570	620	670	720	770	820	870	920	970	1020	1070
L		250	300	350	400	450	500	550	600	650	700	750	800	850	900	950	1000	1050	1100	1150	1200	1250
A		25	75	25	75	25	75	25	75	25	75	25	75	25	75	25	75	25	75	25	75	25
M		1	1	2	2	3	3	4	4	5	5	6	6	7	7	8	8	9	9	10	10	11
N		6	6	8	8	10	10	12	12	14	14	16	16	18	18	20	20	22	22	24	24	26
P		25	75	125	175	225	275	325	375	425	475	525	575	625	675	725	775	825	875	925	975	1025
KG		1.98	2.1	2.33	2.44	2.72	2.83	2.88	3.08	3.19	3.28	3.48	3.61	3.77	3.9	4.04	4.42	4.8	5.18	5.56	5.94	6.32
Linear Speed mm/s	Lead 2	100												90	80	70	60	50	47	40	37	33
	Lead 5	300										292	250	225	200	175	150	125	117	100	92	83
	Lead 10	600										583	500	450	400	350	300	250	233	200	183	167
	Lead 20	1200										1167	1000	900	800	700	600	500	467	400	367	333

※2 When the stroke is 50mm, if fixing the body from the top to the bottom, the fixing hole will be blocked by slider and only can be uses 4 screws to fix;as a result, suggest that fixing actuator body from the bottom to the top.
*When sensor select is D4(Origin sensor is placed at Holder end), vacuum pressure connector is installed on opposite side.

GCH8

▶ Integrated Linear Bearing ▶ Ball Screw Drive

Ordering Method

GCH8 - L10 - 100 - BC - M20B - C4 - 0001

- GCH8 — Model
- L — Ballscrew Accuracy Grade
- 10 — Ball Screw Lead
- 100 — Stroke
- BC — Motor Position
- M20B — Attachment kit for motor
- C4 — Home Sensor
- 0001 — Special Order No.

Ballscrew Accuracy Grade

L	Rolled Ballscrews
C	Ground Ballscrews

*C precision-level ground ball screws are not available in all stroke lengths, please consult the model datasheet.

Ball Screw Lead

5	5mm
10	10mm
20	20mm

Stroke

Rolled Ballscrews
50-1250mm (50mm increments)
Ground Ballscrews
50-700mm (50mm increments)

Motor Position

BC	Motor Exposed
BM	Motor Bottom Side
BL	Motor Left Side
BR	Motor Right Side
-*2	No Motor Position

Attachment kit for motor

With Attachment kit				
M	Mitsubishi	05	–	B*3
P	Panasonic	10	–	
Y	Yaskawa	20	200W	
T	Delta	40	–	
57M635	57□ Shaft Ø6.35			
57M800	57□ Shaft Ø8			
X	Others *1			
Without Attachment kit				
K	No Motor Flange & Coupling *2			

*1 When choosing non-standard motor X, the motor spec must be provided and confirmed by TOYO for installation before the order is established.

*2 When K is selected the motor position section is left blank.

*3 If No Brake,No Description.

Home Sensor

Outside	
C	Motor Side
D	Opposite Motor Side
No Sensor	
E	No Sensor

*When the stroke is 50mm, the sensor installation has the following restrictions:

1.The home sensor and the limit sensor must be installed on different sides of the body.

2.The sensor trigger device must be installed on both sides of the device.

Limit Sensor

Outside	
3	1 Pc
4	2 Pc
No Sensor	
5	No Sensor

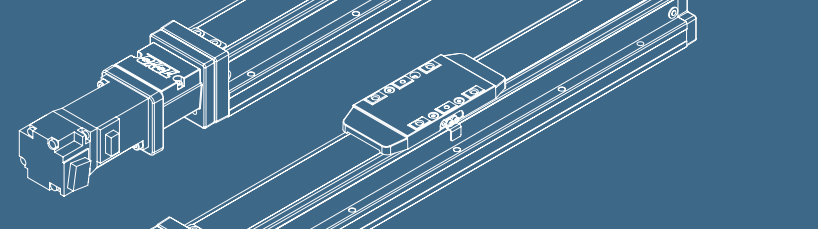

Specification

Item	Ball Screw Spec.	Ballscrew Accuracy Grade Code		L	C
		Ballscrew Accuracy Grade		C7 Rolled Ballscrews	C5 Ground Ballscrews
		Repeatability	mm	±0.005	±0.003
		Stroke (increments)	mm	50-1250mm (50 increments)	50-700mm (50 increments)

Item	Ball screw	Outer dia. & Precision grade	mm	Ø16		
		Lead	mm	5	10	20
		Maximum Rotating speed※1	rpm	3600	3600	3600
		Maximum linear speed※1	mm/s	300	600	1200
		Basic dynamic load rating Ca	N	8042	6300	4152
		Basic static load rating Coa	N	15088	11596	7439
		Load factor		1.2	1.35	1.35
	Linear Guide	Dynamic horizontal: 100 Km of travel	N	18620		
		Dynamic horizontal: 1000 Km of travel	N	8643		
		Dynamic horizontal: 10000 Km of travel	N	4012		
		Static horizontal	N	34230		
	Fixed bearing	Basic dynamic load rating Cr	N	2600		
		Static load rating Cor	N	4750		
	Common Spec	Start torpue	N.cm	10		
		Allowable input torque	N.m	2.2		
		Maximum acceleration	m/s^2	10		
		Friction coefficient		0.03		
		Ambient temperature※2	°C	0~+40		

※1 The maximum rotating and linear speed has changed due to differences in the lead. The ball screw has a slightly axial runout with a longer stroke and the speed must turn down. (Please read the diagram below for dimensions of the linear speed)
※2 For extreme temperatures: -20C ~80C special greases are required.

Static Loading Moment

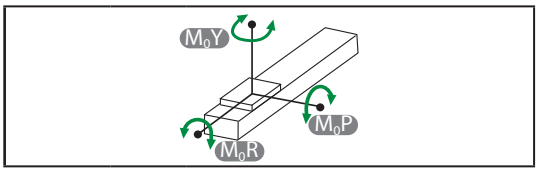

M_0Y	N.m	318
M_0P	N.m	318
M_0R	N.m	626

Dynamic Loading Moment

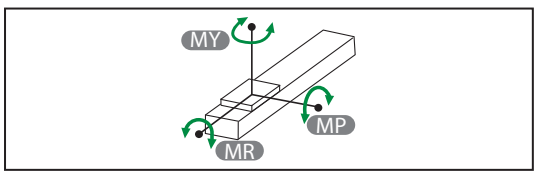

Travel	km	100	1000	10000
MY	N.m	121.6	56.5	26.2
MP	N.m	121.6	56.5	26.2
MR	N.m	201.9	93.7	43.5

Parts list

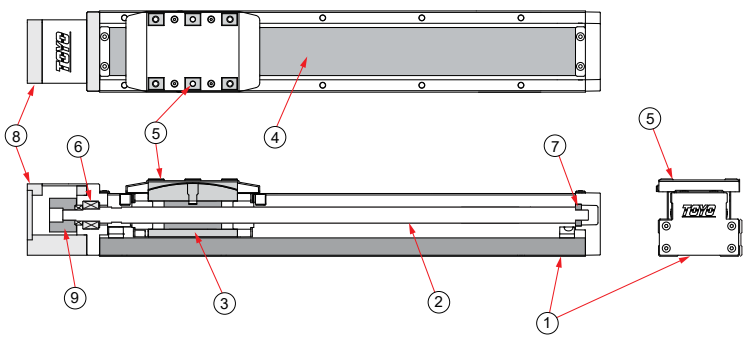

No.	Part Description	Material
1	Base Extrusion	AL6463
2	Ball Screw	S45C
3	Ball Screw Nut	S45C
4	Steel Band	SUS430
5	Carriage	SNCM21H
6	Ball Bearing Dual Arrangement	SUJ2
7	Ball Bearing	SUJ2
8	Fixed Support Block-Inline Motor Mounting Bracket	AL6061
9	Coupling- Clamping	AL6061

BC Motor Inside

2D CAD 3D CAD

Download CAD data at www.toyorobot.com

Unit : mm

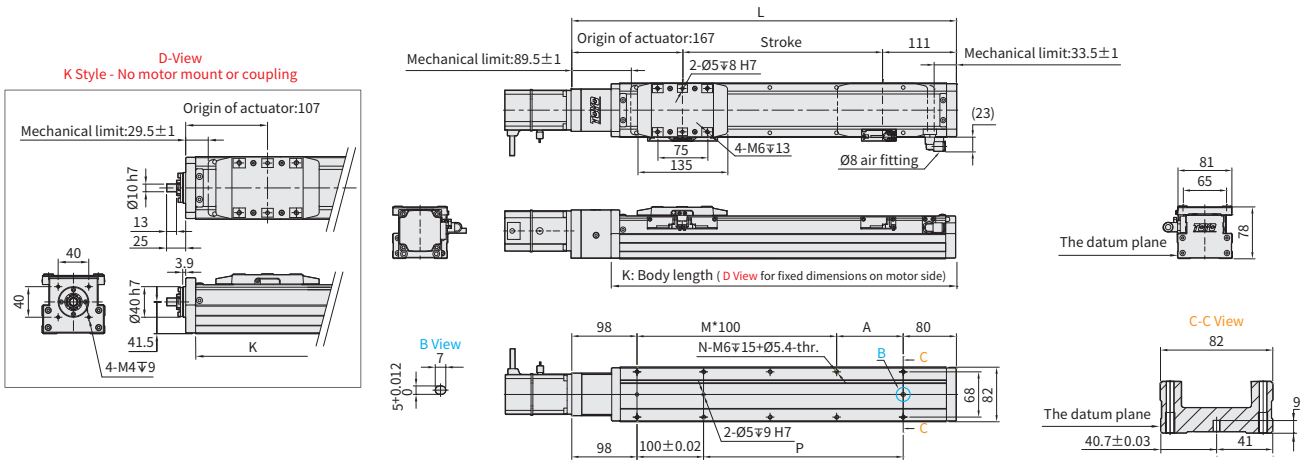

Stroke		50※2	100	150	200	250	300	350	400	450	500	550	600	650	700	750	800	850	900	950	1000	1050	1100	1150	1200	1250
Limit Stroke (±1)		70	120	170	220	270	320	370	420	470	520	570	620	670	720	770	820	870	920	970	1020	1070	1120	1170	1220	1270
L		328	378	428	478	528	578	628	678	728	778	828	878	928	978	1028	1078	1128	1178	1228	1278	1328	1378	1428	1478	1528
A		50	100	50	100	50	100	50	100	50	100	50	100	50	100	50	100	50	100	50	100	50	100	50	100	50
M		1	1	2	2	3	3	4	4	5	5	6	6	7	7	8	8	9	9	10	10	11	11	12	12	13
N		6	6	8	8	10	10	12	12	14	14	16	16	18	18	20	20	22	22	24	24	26	26	27	27	28
P		50	100	150	200	250	300	350	400	450	500	550	600	650	700	750	800	850	900	950	1000	1050	1100	1150	1200	1250
KG※1		4. 21	4. 59	5	5. 3	5. 65	5. 98	6. 3	6. 65	6. 94	7. 27	7. 71	8. 01	8. 42	8. 71	8. 95	9. 26	9. 67	9. 92	10. 31	10. 58	11	11. 42	11. 84	12. 26	12. 68
K		268	318	368	418	468	518	568	618	668	718	768	818	868	918	968	1018	1068	1118	1168	1218	1268	1318	1368	1418	1468
Linear Speed mm/s	Lead 5	300												292	250	250	225	200	175	150	133	117	108	100	92	83
	Lead 10	600												583	500	500	450	400	350	300	267	233	217	200	183	167
	Lead 20	1200												1167	1000	1000	900	800	700	600	533	467	433	400	367	333

※1 KG refers to the weight with motor related accessories (excluding motor), not corresponding to K Type.
※2 When the stroke is 50mm, if fixing the body from the top to the bottom, the fixing hole will be blocked by slider and only can be uses 4 screws to fix;as a result, suggest that fixing actuator body from the bottom to the top.
*When sensor select is D4(Origin sensor is placed at Holder end), vacuum pressure connector is installed on opposite side.

BM Motor Bottom Side

2D CAD 3D CAD

Download CAD data at www.toyorobot.com

Unit : mm

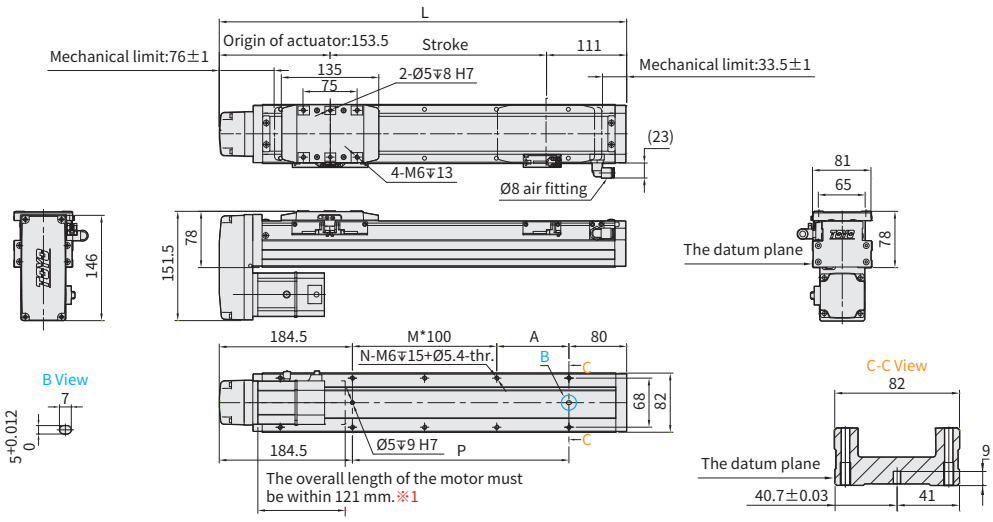

Stroke		50※2	100	150	200	250	300	350	400	450	500	550	600	650	700	750	800	850	900	950	1000	1050	1100	1150	1200	1250
Limit Stroke (±1)		70	120	170	220	270	320	370	420	470	520	570	620	670	720	770	820	870	920	970	1020	1070	1120	1170	1220	1270
L		314. 5	364. 5	414. 5	464. 5	514. 5	564. 5	614. 5	664. 5	714. 5	764. 5	814. 5	864. 5	914. 5	964. 5	1014. 5	1064. 5	1114. 5	1164. 5	1214. 5	1264. 5	1314. 5	1364. 5	1414. 5	1464. 5	1514. 5
A		50	100	50	100	50	100	50	100	50	100	50	100	50	100	50	100	50	100	50	100	50	100	50	100	50
M		0	0	1	1	2	2	3	3	4	4	5	5	6	6	7	7	8	8	9	9	10	10	11	11	12
N		4	4	6	6	8	8	10	10	12	12	14	14	16	16	18	18	20	20	22	22	24	24	26	26	27
P		50	100	150	200	250	300	350	400	450	500	550	600	650	700	750	800	850	900	950	1000	1050	1100	1150	1200	1250
KG※1		4. 25	4. 63	5. 04	5. 39	5. 69	6. 02	6. 34	6. 69	6. 98	7. 31	7. 75	8. 05	8. 46	8. 75	8. 99	9. 3	9. 71	9. 96	10. 38	10. 62	11. 04	11. 46	11. 88	12. 3	12. 72
Linear Speed mm/s	Lead 5	300												292	250	250	225	200	175	150	133	117	108	100	92	83
	Lead 10	600												583	500	500	450	400	350	300	267	233	217	200	183	167
	Lead 20	1200												1167	1000	1000	900	800	700	600	533	467	433	400	367	333

※1 When motor with brake assembled on lower side, or the total length over than spec limit, it may not use standard pinhole. Please contact our sales department if you need more information & requirement.
※2 When the stroke is 50mm, if fixing the body from the top to the bottom, the fixing hole will be blocked by slider and only can be uses 4 screws to fix;as a result, suggest that fixing actuator body from the bottom to the top.
*When sensor select is D4(Origin sensor is placed at Holder end), vacuum pressure connector is installed on opposite side.

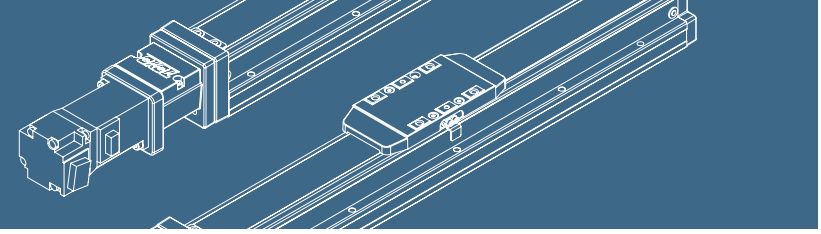

BL Motor Left Side

2D CAD 3D CAD Download CAD data at www.toyorobot.com

Unit : mm

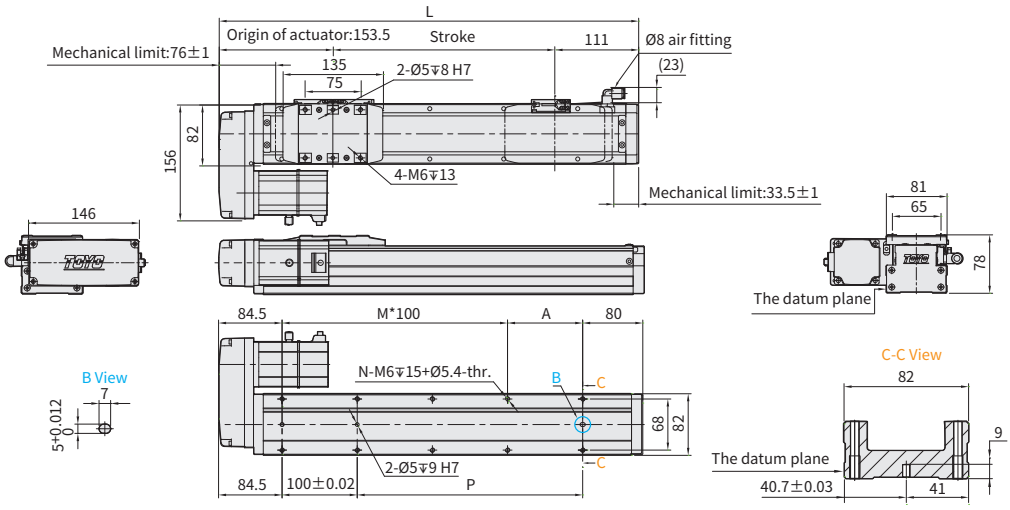

Stroke		50※2	100	150	200	250	300	350	400	450	500	550	600	650	700	750	800	850	900	950	1000	1050	1100	1150	1200	1250
Limit Stroke (±1)		70	120	170	220	270	320	370	420	470	520	570	620	670	720	770	820	870	920	970	1020	1070	1120	1170	1220	1270
L		314.5	364.5	414.5	464.5	514.5	564.5	614.5	664.5	714.5	764.5	814.5	864.5	914.5	964.5	1014.5	1064.5	1114.5	1164.5	1214.5	1264.5	1314.5	1364.5	1414.5	1464.5	1514.5
A		50	100	50	100	50	100	50	100	50	100	50	100	50	100	50	100	50	100	50	100	50	100	50	100	50
M		1	1	2	2	3	3	4	4	5	5	6	6	7	7	8	8	9	9	10	10	11	11	12	12	13
N		6	6	8	8	10	10	12	12	14	14	16	16	18	18	20	20	22	22	24	24	26	26	27	27	28
P		50	100	150	200	250	300	350	400	450	500	550	600	650	700	750	800	850	900	950	1000	1050	1100	1150	1200	1250
KG※1		4.25	4.63	5.04	5.39	5.69	6.02	6.34	6.69	6.98	7.31	7.75	8.05	8.46	8.75	8.99	9.3	9.71	9.96	10.38	10.62	11.04	11.46	11.88	12.3	12.72
Linear Speed mm/s	Lead 5	300												292	250	250	225	200	175	150	133	117	108	100	92	83
	Lead 10	600												583	500	500	450	400	350	300	267	233	217	200	183	167
	Lead 20	1200												1167	1000	1000	900	800	700	600	533	467	433	400	367	333

※2 When the stroke is 50mm, if fixing the body from the top to the bottom, the fixing hole will be blocked by slider and only can be uses 4 screws to fix;as a result, suggest that fixing actuator body from the bottom to the top.
*When sensor select is D4(Origin sensor is placed at Holder end), vacuum pressure connector is installed on opposite side.

BR Motor Right Side

2D CAD 3D CAD Download CAD data at www.toyorobot.com

Unit : mm

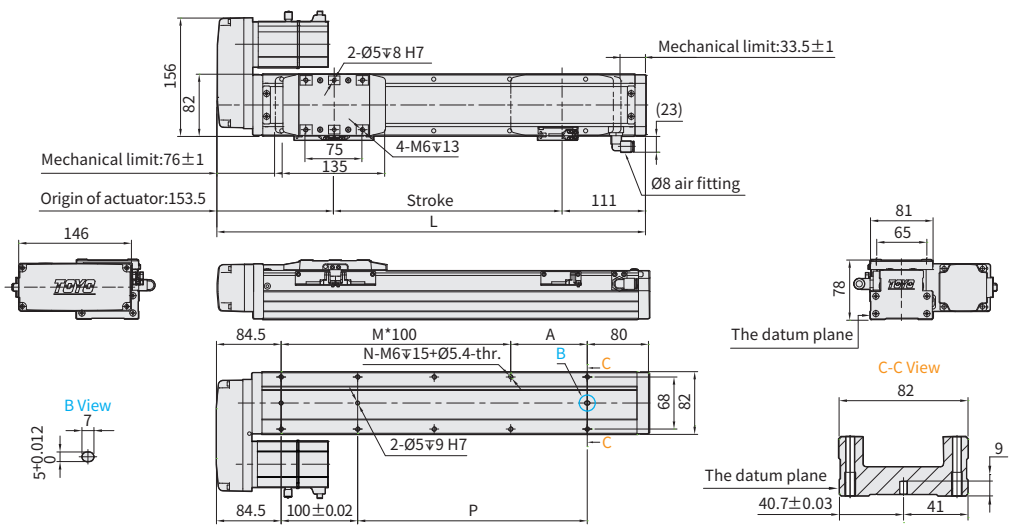

Stroke		□50 *2	100	150	200	250	300	350	400	450	500	550	600	650	700	750	800	850	900	950	1000	1050	1100	1150	1200	1250
Limit Stroke (±1)		70	120	170	220	270	320	370	420	470	520	570	620	670	720	770	820	870	920	970	1020	1070	1120	1170	1220	1270
L		314.5	364.5	414.5	464.5	514.5	564.5	614.5	664.5	714.5	764.5	814.5	864.5	914.5	964.5	1014.5	1064.5	1114.5	1164.5	1214.5	1264.5	1314.5	1364.5	1414.5	1464.5	1514.5
A		50	100	50	100	50	100	50	100	50	100	50	100	50	100	50	100	50	100	50	100	50	100	50	100	50
M		1	1	2	2	3	3	4	4	5	5	6	6	7	7	8	8	9	9	10	10	11	11	12	12	13
N		6	6	8	8	10	10	12	12	14	14	16	16	18	18	20	20	22	22	24	24	26	26	27	27	28
P		50	100	150	200	250	300	350	400	450	500	550	600	650	700	750	800	850	900	950	1000	1050	1100	1150	1200	1250
KG※1		4.25	4.63	5.04	5.39	5.69	6.02	6.34	6.69	6.98	7.31	7.75	8.05	8.46	8.75	8.99	9.3	9.71	9.96	10.38	10.62	11.04	11.46	11.88	12.3	12.72
Linear Speed mm/s	Lead 5	300												292	250	250	225	200	175	150	133	117	108	100	92	83
	Lead 10	600												583	500	500	450	400	350	300	267	233	217	200	183	167
	Lead 20	1200												1167	1000	1000	900	800	700	600	533	467	433	400	367	333

※2 When the stroke is 50mm, if fixing the body from the top to the bottom, the fixing hole will be blocked by slider and only can be uses 4 screws to fix;as a result, suggest that fixing actuator body from the bottom to the top.
*When sensor select is D4(Origin sensor is placed at Holder end), vacuum pressure connector is installed on opposite side.

GCH8

▶ Integrated Linear Bearing ▶ Ball Screw Drive

Ordering Method

GCH8 - L10 - 100 - BC - M40B - C4 - 0001

Model | **Special Order No.**

Ballscrew Accuracy Grade

L	Rolled Ballscrews
C	Ground Ballscrews

*C precision-level ground ball screws are not available in all stroke lengths, please consult the model datasheet.

Ball Screw Lead

5	5mm
10	10mm
20	20mm

Stroke

Rolled Ballscrews
50-1250mm (50mm increments)
Ground Ballscrews
50-700mm (50mm increments)

Motor Position

BC	Motor Exposed
BM	Motor Bottom Side
BL	Motor Left Side
BR	Motor Right Side
- *2	No Motor Position

Attachment kit for motor

With Attachment kit				
M	Mitsubishi	05	–	B*3
P	Panasonic	10	–	
Y	Yaskawa	20	–	
T	Delta	40	400W	
57M635	57□ Shaft Ø6.35			
57M800	57□ Shaft Ø8"			
X	Others *1			
Without Attachment kit				
K	No Motor Flange & Coupling *2			

*1 When choosing non-standard motor X, the motor spec must be provided and confirmed by TOYO for installation before the order is established.

*2 When K is selected the motor position section is left blank.

*3 If No Brake,No Description.

Home Sensor

Outside	
C	Motor Side
D	Opposite Motor Side
No Sensor	
E	No Sensor

*When the stroke is 50mm, the sensor installation has the following restrictions:

1.The home sensor and the limit sensor must be installed on different sides of the body.

2.The sensor trigger device must be installed on both sides of the device.

Limit Sensor

Outside	
3	1 Pc
4	2 Pc
No Sensor	
5	No Sensor

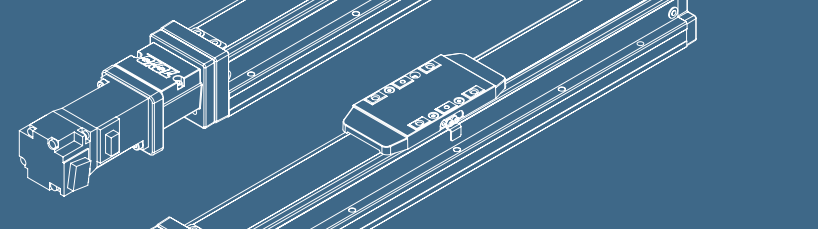

Specification

Item	Ball Screw Spec.	Ballscrew Accuracy Grade Code		L	C
		Ballscrew Accuracy Grade		C7 Rolled Ballscrews	C5 Ground Ballscrews
		Repeatability	mm	±0.005	±0.003
		Stroke (increments)	mm	50-1250mm (50 increments)	50-700mm (50 increments)

Item	Ball screw	Outer dia. & Precision grade	mm	Ø16		
		Lead	mm	5	10	20
		Maximum Rotating speed※1	rpm	3600	3600	3600
		Maximum linear speed※1	mm/s	300	600	1200
		Basic dynamic load rating Ca	N	8042	6300	4152
		Basic static load rating Coa	N	15088	11596	7439
		Load factor		1.2	1.35	1.35
	Linear Guide	Dynamic horizontal: 100 Km of travel	N	18620		
		Dynamic horizontal: 1000 Km of travel	N	8643		
		Dynamic horizontal: 10000 Km of travel	N	4012		
		Static horizontal	N	34230		
	Fixed bearing	Basic dynamic load rating Cr	N	2600		
		Static load rating Cor	N	4750		
	Common Spec	Start torpue	N.cm	10		
		Allowable input torque	N.m	2.2		
		Maximum acceleration	m/s^2	10		
		Friction coefficient		0.03		
		Ambient temperature※2	°C	0~+40		

※1 The maximum rotating and linear speed has changed due to differences in the lead. The ball screw has a slightly axial runout with a longer stroke and the speed must turn down. (Please read the diagram below for dimensions of the linear speed)
※2 For extreme temperatures: -20C ~80C special greases are required.

Static Loading Moment

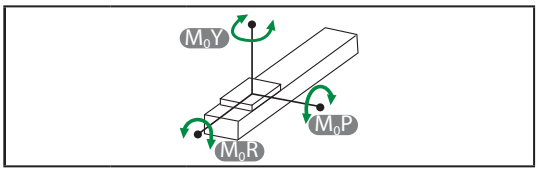

M_0Y	N.m	318
M_0P	N.m	318
M_0R	N.m	626

Dynamic Loading Moment

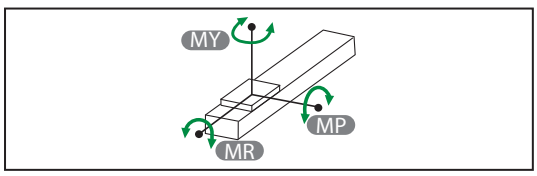

Travel	km	100	1000	10000
MY	N.m	121.6	56.5	26.2
MP	N.m	121.6	56.5	26.2
MR	N.m	201.9	93.7	43.5

Parts list

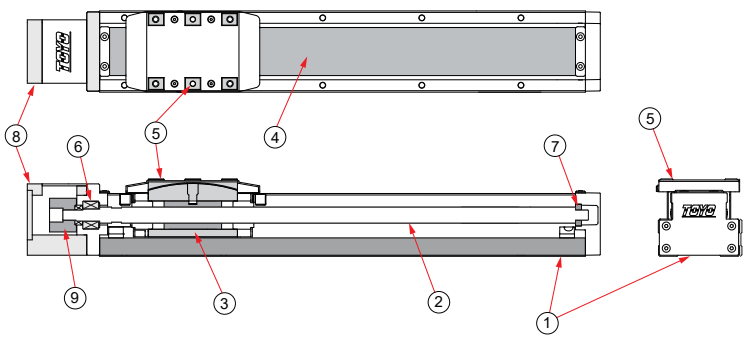

No.	Part Description	Material
1	Base Extrusion	AL6463
2	Ball Screw	S45C
3	Ball Screw Nut	S45C
4	Steel Band	SUS430
5	Carriage	SNCM21H
6	Ball Bearing Dual Arrangement	SUJ2
7	Ball Bearing	SUJ2
8	Fixed Support Block-Inline Motor Mounting Bracket	AL6061
9	Coupling- Clamping	AL6061

BC Motor Inside

2D CAD 3D CAD

Download CAD data at www.toyorobot.com

Unit : mm

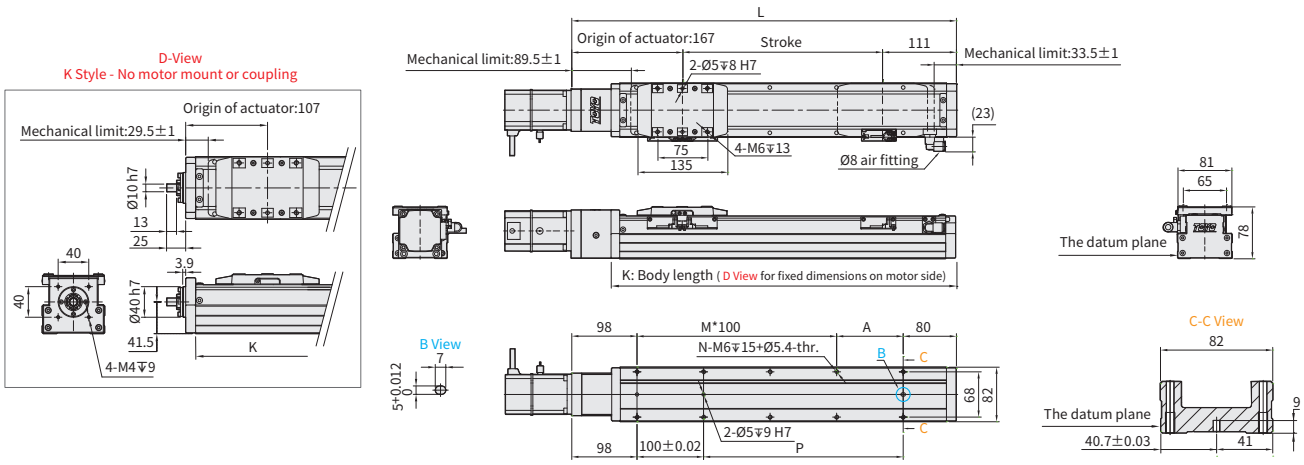

Stroke		50※2	100	150	200	250	300	350	400	450	500	550	600	650	700	750	800	850	900	950	1000	1050	1100	1150	1200	1250
Limit Stroke (±1)		70	120	170	220	270	320	370	420	470	520	570	620	670	720	770	820	870	920	970	1020	1070	1120	1170	1220	1270
L		328	378	428	478	528	578	628	678	728	778	828	878	928	978	1028	1078	1128	1178	1228	1278	1328	1378	1428	1478	1528
A		50	100	50	100	50	100	50	100	50	100	50	100	50	100	50	100	50	100	50	100	50	100	50	100	50
M		1	1	2	2	3	3	4	4	5	5	6	6	7	7	8	8	9	9	10	10	11	11	12	12	13
N		6	6	8	8	10	10	12	12	14	14	16	16	18	18	20	20	22	22	24	24	26	26	27	27	28
P		50	100	150	200	250	300	350	400	450	500	550	600	650	700	750	800	850	900	950	1000	1050	1100	1150	1200	1250
KG※1		4. 21	4. 59	5	5. 3	5. 65	5. 98	6. 3	6. 65	6. 94	7. 27	7. 71	8. 01	8. 42	8. 71	8. 95	9. 26	9. 67	9. 92	10. 31	10. 58	11	11. 42	11. 84	12. 26	12. 68
K		268	318	368	418	468	518	568	618	668	718	768	818	868	918	968	1018	1068	1118	1168	1218	1268	1318	1368	1418	1468
Linear Speed mm/s	Lead 5	300												292	250	250	225	200	175	150	133	117	108	100	92	83
	Lead 10	600												583	500	500	450	400	350	300	267	233	217	200	183	167
	Lead 20	1200												1167	1000	1000	900	800	700	600	533	467	433	400	367	333

※1 KG refers to the weight with motor related accessories (excluding motor), not corresponding to K Type.
※2 When the stroke is 50mm, if fixing the body from the top to the bottom, the fixing hole will be blocked by slider and only can be uses 4 screws to fix;as a result, suggest that fixing actuator body from the bottom to the top.
*When sensor select is D4(Origin sensor is placed at Holder end), vacuum pressure connector is installed on opposite side.

BM Motor Bottom Side

2D CAD 3D CAD

Download CAD data at www.toyorobot.com

Unit : mm

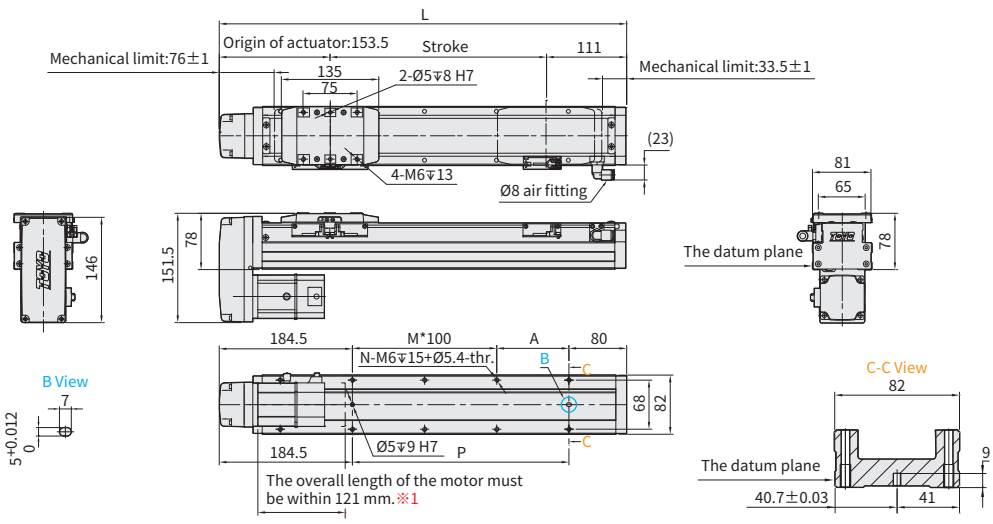

Stroke		50※2	100	150	200	250	300	350	400	450	500	550	600	650	700	750	800	850	900	950	1000	1050	1100	1150	1200	1250
Limit Stroke (±1)		70	120	170	220	270	320	370	420	470	520	570	620	670	720	770	820	870	920	970	1020	1070	1120	1170	1220	1270
L		314. 5	364. 5	414. 5	464. 5	514. 5	564. 5	614. 5	664. 5	714. 5	764. 5	814. 5	864. 5	914. 5	964. 5	1014. 5	1064. 5	1114. 5	1164. 5	1214. 5	1264. 5	1314. 5	1364. 5	1414. 5	1464. 5	1514. 5
A		50	100	50	100	50	100	50	100	50	100	50	100	50	100	50	100	50	100	50	100	50	100	50	100	50
M		0	0	1	1	2	2	3	3	4	4	5	5	6	6	7	7	8	8	9	9	10	10	11	11	12
N		4	4	6	6	8	8	10	10	12	12	14	14	16	16	18	18	20	20	22	22	24	24	26	26	27
P		50	100	150	200	250	300	350	400	450	500	550	600	650	700	750	800	850	900	950	1000	1050	1100	1150	1200	1250
KG※1		4. 25	4. 63	5. 04	5. 39	5. 69	6. 02	6. 34	6. 69	6. 98	7. 31	7. 75	8. 05	8. 46	8. 75	8. 99	9. 3	9. 71	9. 96	10. 38	10. 62	11. 04	11. 46	11. 88	12. 3	12. 72
Linear Speed mm/s	Lead 5	300												292	250	250	225	200	175	150	133	117	108	100	92	83
	Lead 10	600												583	500	500	450	400	350	300	267	233	217	200	183	167
	Lead 20	1200												1167	1000	1000	900	800	700	600	533	467	433	400	367	333

※1 When motor with brake assembled on lower side, or the total length over than spec limit, it may not use standard pinhole. Please contact our sales department if you need more information & requirement.
※2 When the stroke is 50mm, if fixing the body from the top to the bottom, the fixing hole will be blocked by slider and only can be uses 4 screws to fix;as a result, suggest that fixing actuator body from the bottom to the top.
*When sensor select is D4(Origin sensor is placed at Holder end), vacuum pressure connector is installed on opposite side.

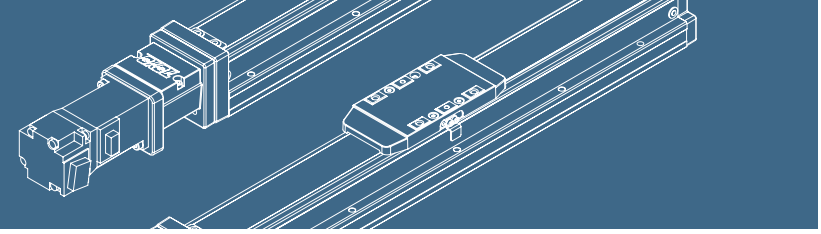

BL Motor Left Side

2D CAD 3D CAD Download CAD data at www.toyorobot.com

Unit : mm

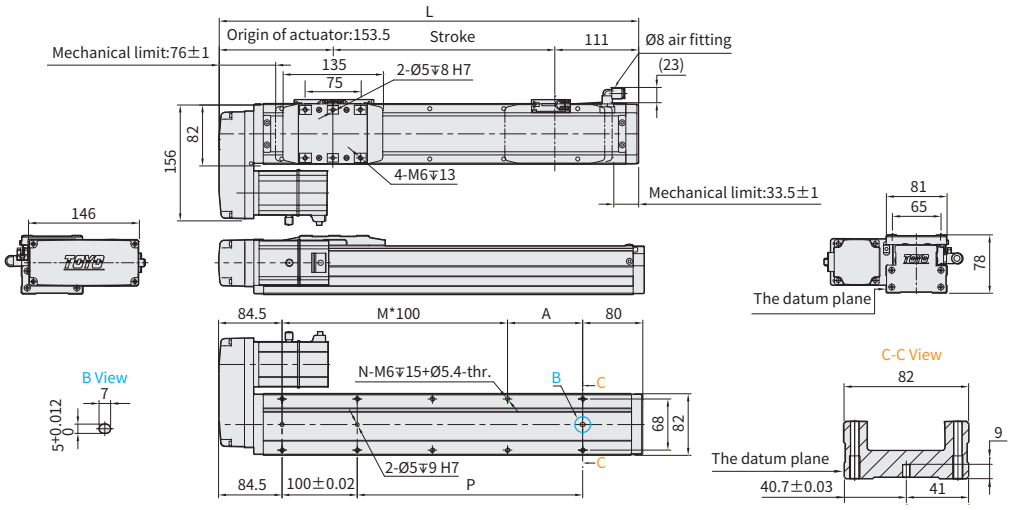

Stroke		50※2	100	150	200	250	300	350	400	450	500	550	600	650	700	750	800	850	900	950	1000	1050	1100	1150	1200	1250
Limit Stroke (±1)		70	120	170	220	270	320	370	420	470	520	570	620	670	720	770	820	870	920	970	1020	1070	1120	1170	1220	1270
L		314.5	364.5	414.5	464.5	514.5	564.5	614.5	664.5	714.5	764.5	814.5	864.5	914.5	964.5	1014.5	1064.5	1114.5	1164.5	1214.5	1264.5	1314.5	1364.5	1414.5	1464.5	1514.5
A		50	100	50	100	50	100	50	100	50	100	50	100	50	100	50	100	50	100	50	100	50	100	50	100	50
M		1	1	2	2	3	3	4	4	5	5	6	6	7	7	8	8	9	9	10	10	11	11	12	12	13
N		6	6	8	8	10	10	12	12	14	14	16	16	18	18	20	20	22	22	24	24	26	26	27	27	28
P		50	100	150	200	250	300	350	400	450	500	550	600	650	700	750	800	850	900	950	1000	1050	1100	1150	1200	1250
KG※1		4.25	4.63	5.04	5.39	5.69	6.02	6.34	6.69	6.98	7.31	7.75	8.05	8.46	8.75	8.99	9.3	9.71	9.96	10.38	10.62	11.04	11.46	11.88	12.3	12.72
Linear Speed mm/s	Lead 5	300												292	250	250	225	200	175	150	133	117	108	100	92	83
	Lead 10	600												583	500	500	450	400	350	300	267	233	217	200	183	167
	Lead 20	1200												1167	1000	1000	900	800	700	600	533	467	433	400	367	333

※2 When the stroke is 50mm, if fixing the body from the top to the bottom, the fixing hole will be blocked by slider and only can be uses 4 screws to fix;as a result, suggest that fixing actuator body from the bottom to the top.
*When sensor select is D4(Origin sensor is placed at Holder end), vacuum pressure connector is installed on opposite side.

BR Motor Right Side

2D CAD 3D CAD Download CAD data at www.toyorobot.com

Unit : mm

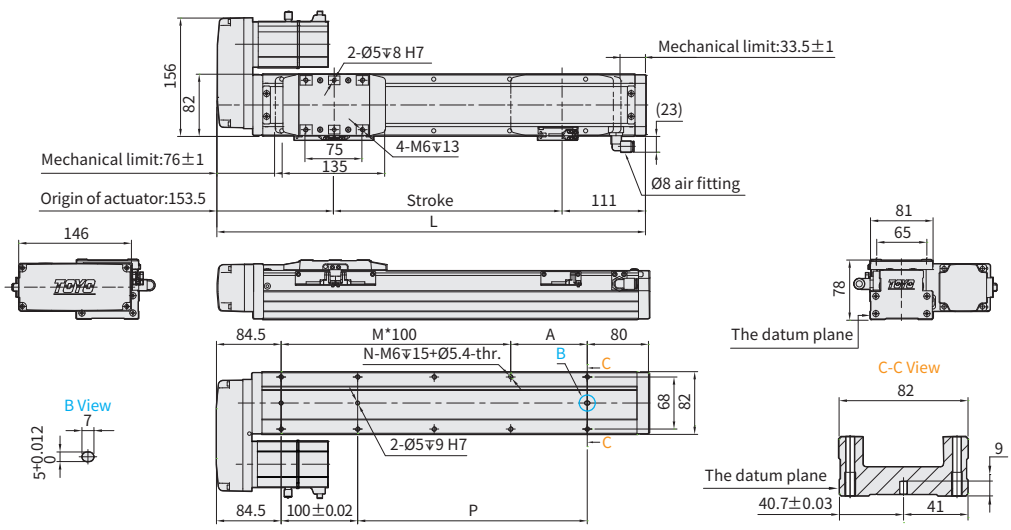

Stroke		□50 *2	100	150	200	250	300	350	400	450	500	550	600	650	700	750	800	850	900	950	1000	1050	1100	1150	1200	1250
Limit Stroke (±1)		70	120	170	220	270	320	370	420	470	520	570	620	670	720	770	820	870	920	970	1020	1070	1120	1170	1220	1270
L		314.5	364.5	414.5	464.5	514.5	564.5	614.5	664.5	714.5	764.5	814.5	864.5	914.5	964.5	1014.5	1064.5	1114.5	1164.5	1214.5	1264.5	1314.5	1364.5	1414.5	1464.5	1514.5
A		50	100	50	100	50	100	50	100	50	100	50	100	50	100	50	100	50	100	50	100	50	100	50	100	50
M		1	1	2	2	3	3	4	4	5	5	6	6	7	7	8	8	9	9	10	10	11	11	12	12	13
N		6	6	8	8	10	10	12	12	14	14	16	16	18	18	20	20	22	22	24	24	26	26	27	27	28
P		50	100	150	200	250	300	350	400	450	500	550	600	650	700	750	800	850	900	950	1000	1050	1100	1150	1200	1250
KG※1		4.25	4.63	5.04	5.39	5.69	6.02	6.34	6.69	6.98	7.31	7.75	8.05	8.46	8.75	8.99	9.3	9.71	9.96	10.38	10.62	11.04	11.46	11.88	12.3	12.72
Linear Speed mm/s	Lead 5	300												292	250	250	225	200	175	150	133	117	108	100	92	83
	Lead 10	600												583	500	500	450	400	350	300	267	233	217	200	183	167
	Lead 20	1200												1167	1000	1000	900	800	700	600	533	467	433	400	367	333

※2 When the stroke is 50mm, if fixing the body from the top to the bottom, the fixing hole will be blocked by slider and only can be uses 4 screws to fix;as a result, suggest that fixing actuator body from the bottom to the top.
*When sensor select is D4(Origin sensor is placed at Holder end), vacuum pressure connector is installed on opposite side.

GCH12

▶ Integrated Linear Bearing ▶ Ball Screw Drive

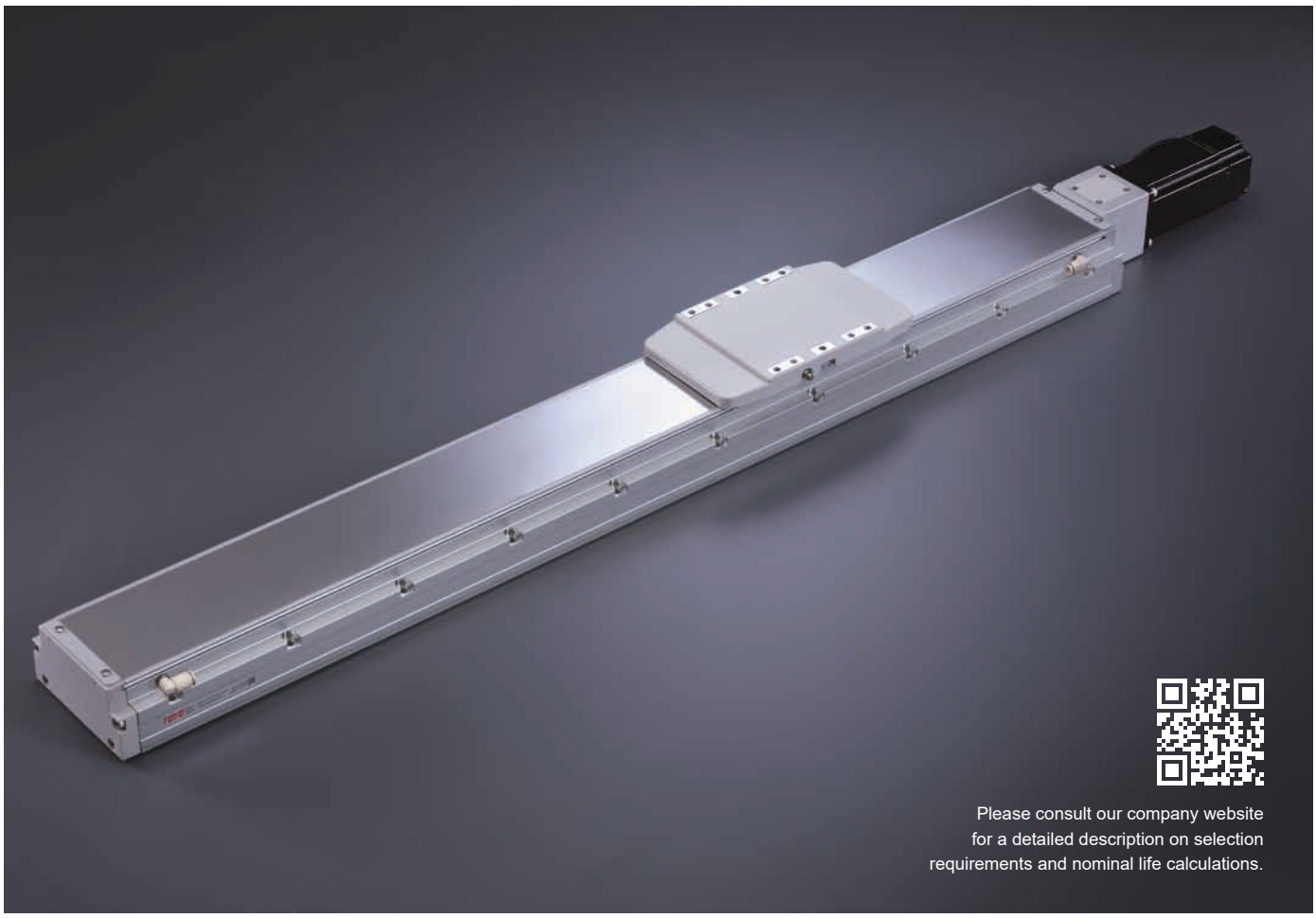

Please consult our company website for a detailed description on selection requirements and nominal life calculations.

Ordering Method

GCH12 - L10 - 100 - BC - M40B - C4 - 0001

Model | **Special Order No.**

Ballscrew Accuracy Grade

L	Rolled Ballscrews
C	Ground Ballscrews

*C precision-level ground ball screws are not available in all stroke lengths, please consult the model datasheet.

Ball Screw Lead

5	5mm
10	10mm
20	20mm
32	32mm

Stroke

Rolled Ballscrews
50-1250mm (50mm increments)
Ground Ballscrews
50-700mm (50mm increments)

Motor Position

BC	Motor Exposed
BM	Motor Bottom Side
BL	Motor Left Side
BR	Motor Right Side
- *2	No Motor Position

Attachment kit for motor

With Attachment kit				
M	Mitsubishi	05	–	B*3
P	Panasonic	10	–	
Y	Yaskawa	20	–	
T	Delta	40	400W	
57M635	57□ Shaft Ø6.35			
57M800	57□ Shaft Ø8			
85M1270	85□ Shaft Ø12.7			
85M1400	85□ Shaft Ø14			
85M1270D	85□ Shaft Ø12.7 with a longer coupling			
85M1588D	85□ Shaft Ø15.88 with a longer coupling			
X	Others *1			
Without Attachment kit				
K	No Motor Flange & Coupling *2			

*1 When choosing non-standard motor X, the motor spec must be provided and confirmed by TOYO for installation before the order is established.

*2 When K is selected the motor position section is left blank.

*3 If No Brake,No Description.

Home Sensor

Outside	
C	Motor Side
D	Opposite Motor Side
No Sensor	
E	No Sensor

*When the stroke is 50mm, the sensor installation has the following restrictions:

1.The home sensor and the limit sensor must be installed on different sides of the body.

2.The sensor trigger device must be installed on both sides of the device.

Limit Sensor

Outside	
3	1 Pc
4	2 Pc
No Sensor	
5	No Sensor

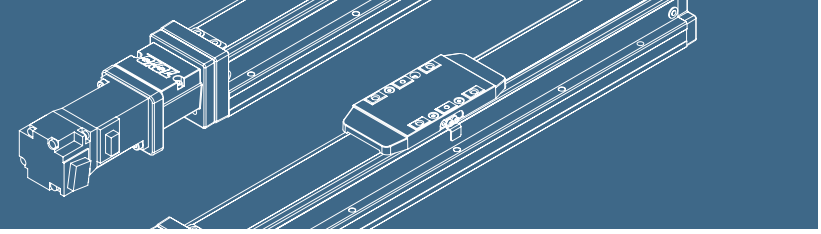

Specification

Item	Ball Screw Spec.	Ballscrew Accuracy Grade Code		L	C
		Ballscrew Accuracy Grade		C7 Rolled Ballscrews	C5 Ground Ballscrews
		Repeatability	mm	±0.005	±0.003
		Stroke (increments)	mm	50-1250mm (50 increments)	50-700mm (50 increments)

Item	Ball screw	Outer dia. & Precision grade	mm	Ø16			
		Lead	mm	5	10	20	32
		Maximum Rotating speed※1	rpm	3600	3600	3600	3600
		Maximum linear speed※1	mm/s	300	600	1200	1920
		Basic dynamic load rating Ca	N	11570	6300	4152	7326
		Basic static load rating Coa	N	23030	11596	7439	14157
		Load factor		1.2	1.35	1.35	1.75
	Linear Guide	Dynamic horizontal: 100 Km of travel	N	55304			
		Dynamic horizontal: 1000 Km of travel	N	25670			
		Dynamic horizontal: 10000 Km of travel	N	11915			
		Static horizontal	N	95083			
	Fixed bearing	Basic dynamic load rating Cr	N	2600			
		Static load rating Cor	N	4750			
	Common Spec	Start torpue	N.cm	10			
		Allowable input torque	N.m	3.1			
		Maximum acceleration	m/s^2	10			
		Friction coefficient		0.03			
		Ambient temperature※2	°C	0~+40			

※1 The maximum rotating and linear speed has changed due to differences in the lead. The ball screw has a slightly axial runout with a longer stroke and the speed must turn down. (Please read the diagram below for dimensions of the linear speed)
※2 For extreme temperatures: -20C ~80C special greases are required.

Static Loading Moment

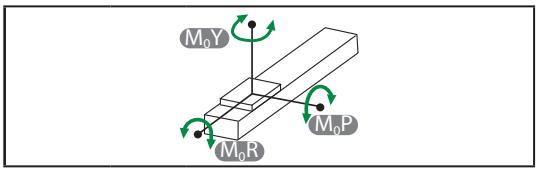

M_0Y	N.m	606
M_0P	N.m	606
M_0R	N.m	1168

Dynamic Loading Moment

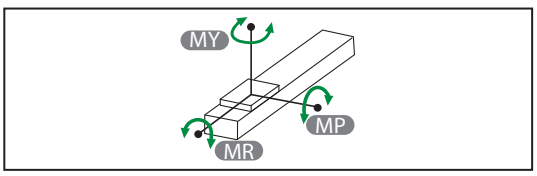

Travel	km	100	1000	10000
MY	N.m	602.1	279.5	129.7
MP	N.m	602.1	279.5	129.7
MR	N.m	1037	481.3	233.4

Parts list

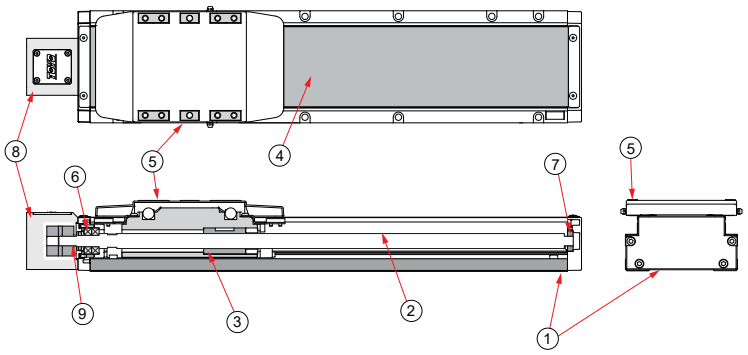

No.	Part Description	Material
1	Base Extrusion	AL6463
2	Ball Screw	S45C
3	Ball Screw Nut	S45C
4	Steel Band	SUS430
5	Carriage	AL6061
6	Ball Bearing Dual Arrangement	SUJ2
7	Ball Bearing	SUJ2
8	Fixed Support Block-Inline Motor Mounting Bracket	AL6061
9	Coupling- Clamping	AL6061

GCH12

▶ Integrated Linear Bearing ▶ Ball Screw Drive

BC Motor Inside

2D CAD 3D CAD Download CAD data at www.toyorobot.com

Unit : mm

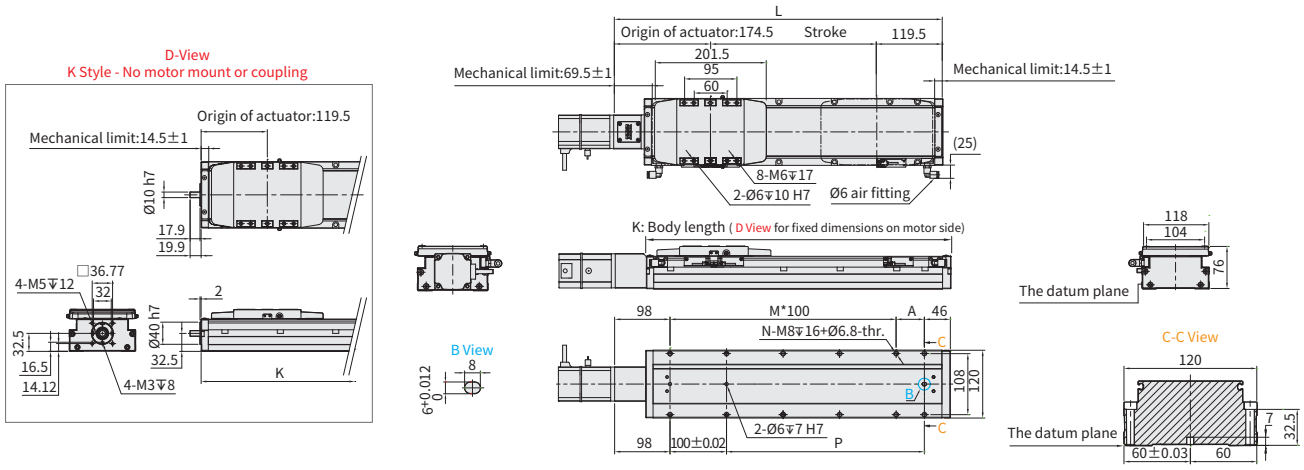

Stroke		50※2	100	150	200	250	300	350	400	450	500	550	600	650	700	750	800	850	900	950	1000	1050	1100	1150	1200	1250
Limit Stroke (±1)		58.5	108.5	158.5	208.5	258.5	308.5	358.5	408.5	458.5	508.5	558.5	608.5	658.5	708.5	758.5	808.5	858.5	908.5	958.5	1008.5	1058.5	1108.5	1158.5	1208.5	1258.5
L		344	394	444	494	544	594	644	694	744	794	844	894	944	994	1044	1094	1144	1194	1244	1294	1344	1394	1444	1494	1544
A		100	50	100	50	100	50	100	50	100	50	100	50	100	50	100	50	100	50	100	50	100	50	100	50	100
M		1	2	2	3	3	4	4	5	5	6	6	7	7	8	8	9	9	10	10	11	11	12	12	13	13
N		6	8	8	10	10	12	12	14	14	16	16	18	18	20	20	22	22	24	24	26	26	28	28	30	30
P		100	150	200	250	300	350	400	450	500	550	600	650	700	750	800	850	900	950	1000	1050	1100	1150	1200	1250	1300
KG※1		5.35	5.7	6.05	6.4	6.75	7.1	7.45	7.8	8.15	8.5	8.85	9.2	9.55	9.9	10.25	10.6	10.95	11.3	11.65	12	12.35	12.7	13.05	13.4	13.75
K		289	339	389	439	489	539	589	639	689	739	789	839	889	939	989	1039	1089	1139	1189	1239	1289	1339	1389	1439	1489
Linear Speed mm/s	Lead 5	300														275	250	225	200	175	167	158	142	133	125	117
	Lead 10	600														550	500	450	400	350	333	317	283	267	250	233
	Lead 20	1200														1100	1000	900	800	700	667	633	567	533	500	467
	Lead 32	1920														1760	1600	1440	1280	1120	1067	1013	907	853	800	747

※1 KG refers to the weight with motor related accessories (excluding motor), not corresponding to K Type.
※2 When the stroke is 50mm, if fixing the body from the top to the bottom, the fixing hole will be blocked by slider and only can be uses 4 screws to fix;as a result, suggest that fixing actuator body from the bottom to the top.
*When sensor select is D4(Origin sensor is placed at Holder end), vacuum pressure connector is installed on opposite side.

BM Motor Bottom Side

2D CAD 3D CAD Download CAD data at www.toyorobot.com

Unit : mm

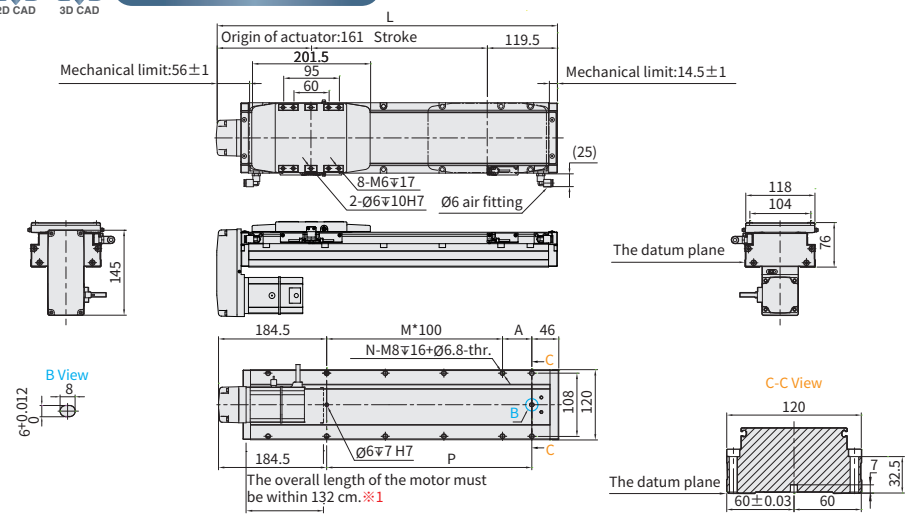

Stroke		50※2	100	150	200	250	300	350	400	450	500	550	600	650	700	750	800	850	900	950	1000	1050	1100	1150	1200	1250
Limit Stroke (±1)		58.5	108.5	158.5	208.5	258.5	308.5	358.5	408.5	458.5	508.5	558.5	608.5	658.5	708.5	758.5	808.5	858.5	908.5	958.5	1008.5	1058.5	1108.5	1158.5	1208.5	1258.5
L		330.5	380.5	430.5	480.5	530.5	580.5	630.5	680.5	730.5	780.5	830.5	880.5	930.5	980.5	1030.5	1080.5	1130.5	1180.5	1230.5	1280.5	1330.5	1380.5	1430.5	1480.5	1530.5
A		100	50	100	50	100	50	100	50	100	50	100	50	100	50	100	50	100	50	100	50	100	50	100	50	100
M		0	1	1	2	2	3	3	4	4	5	5	6	6	7	7	8	8	9	9	10	10	11	11	12	12
N		4	6	6	8	8	10	10	12	12	14	14	16	16	18	18	20	20	22	22	24	24	26	26	28	28
P		100	150	200	250	300	350	400	450	500	550	600	650	700	750	800	850	900	950	1000	1050	1100	1150	1200	1250	1300
KG※1		5.21	5.56	5.91	6.56	6.91	7.26	7.61	7.96	8.31	8.66	9.01	9.36	9.71	10.06	10.41	10.76	11.11	11.46	11.81	12.16	12.51	12.86	13.21	13.56	13.91
Linear Speed mm/s	Lead 5	300														275	250	225	200	175	167	158	142	133	125	117
	Lead 10	600														550	500	450	400	350	333	317	283	267	250	233
	Lead 20	1200														1100	1000	900	800	700	667	633	567	533	500	467
	Lead 32	1920														1760	1600	1440	1280	1120	1067	1013	907	853	800	747

※1 When motor with brake assembled on lower side, or the total length over than spec limit, it may not use standard pinhole. Please contact our sales department if you need more information & requirement.
※2 When the stroke is 50mm, if fixing the body from the top to the bottom, the fixing hole will be blocked by slider and only can be uses 4 screws to fix;as a result, suggest that fixing actuator body from the bottom to the top.
*When sensor select is D4(Origin sensor is placed at Holder end), vacuum pressure connector is installed on opposite side.

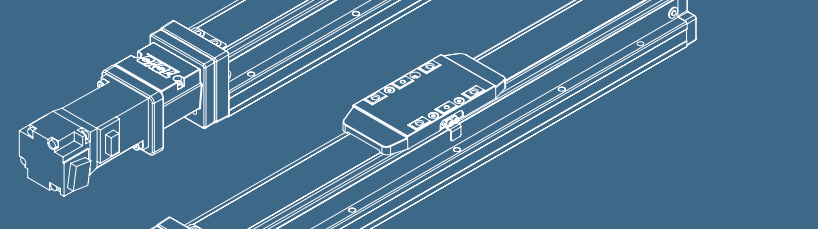

BL Motor Left Side

2D CAD 3D CAD Download CAD data at www.toyorobot.com

Unit : mm

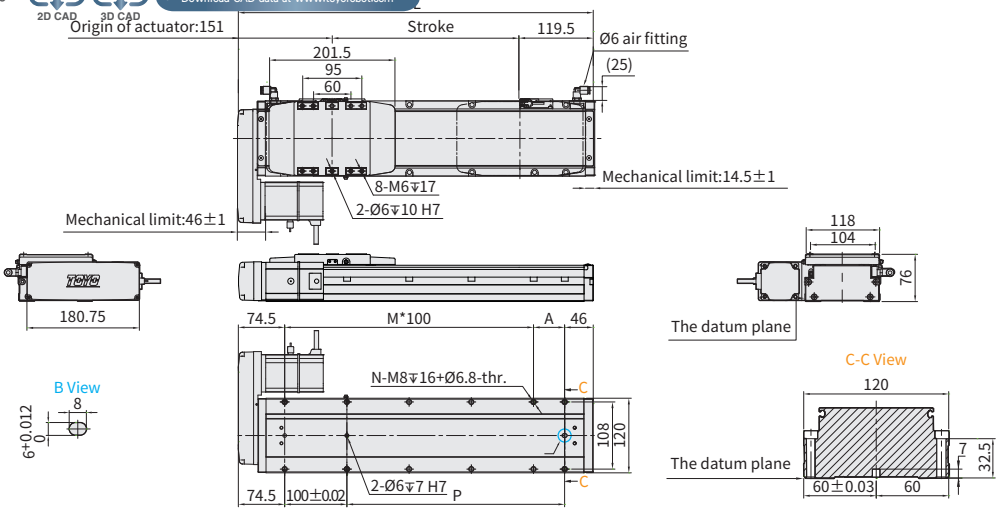

Stroke		50※2	100	150	200	250	300	350	400	450	500	550	600	650	700	750	800	850	900	950	1000	1050	1100	1150	1200	1250
Limit Stroke (±1)		58.5	108.5	158.5	208.5	258.5	308.5	358.5	408.5	458.5	508.5	558.5	608.5	658.5	708.5	758.5	808.5	858.5	908.5	958.5	1008.5	1058.5	1108.5	1158.5	1208.5	1258.5
L		320.5	370.5	420.5	470.5	520.5	570.5	620.5	670.5	720.5	770.5	820.5	870.5	920.5	970.5	1020.5	1070.5	1120.5	1170.5	1220.5	1270.5	1320.5	1370.5	1420.5	1470.5	1520.5
A		100	50	100	50	100	50	100	50	100	50	100	50	100	50	100	50	100	50	100	50	100	50	100	50	100
M		1	2	2	3	3	4	4	5	5	6	6	7	7	8	8	9	9	10	10	11	11	12	12	13	13
N		6	8	8	10	10	12	12	14	14	16	16	18	18	20	20	22	22	24	24	26	26	28	28	30	30
P		100	150	200	250	300	350	400	450	500	550	600	650	700	750	800	850	900	950	1000	1050	1100	1150	1200	1250	1300
KG※1		5.21	5.56	5.91	6.56	6.91	7.26	7.61	7.96	8.31	8.66	9.01	9.36	9.71	10.06	10.41	10.76	11.11	11.46	11.81	12.16	12.51	12.86	13.21	13.56	13.91
Linear Speed mm/s	Lead 5	300														275	250	225	200	175	167	158	142	133	125	117
	Lead 10	600														550	500	450	400	350	333	317	283	267	250	233
	Lead 20	1200														1100	1000	900	800	700	667	633	567	533	500	467
	Lead 32	1920														1760	1600	1440	1280	1120	1067	1013	907	853	800	747

※2 When the stroke is 50mm, if fixing the body from the top to the bottom, the fixing hole will be blocked by slider and only can be uses 4 screws to fix;as a result, suggest that fixing actuator body from the bottom to the top.
*When sensor select is D4(Origin sensor is placed at Holder end), vacuum pressure connector is installed on opposite side.

BR Motor Right Side

2D CAD 3D CAD Download CAD data at www.toyorobot.com

Unit : mm

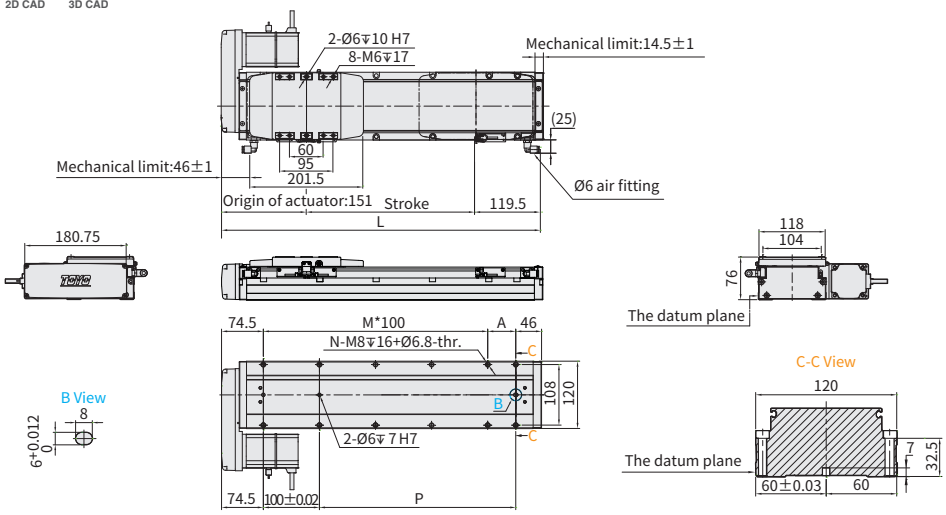

Stroke		50※2	100	150	200	250	300	350	400	450	500	550	600	650	700	750	800	850	900	950	1000	1050	1100	1150	1200	1250
Limit Stroke (±1)		58.5	108.5	158.5	208.5	258.5	308.5	358.5	408.5	458.5	508.5	558.5	608.5	658.5	708.5	758.5	808.5	858.5	908.5	958.5	1008.5	1058.5	1108.5	1158.5	1208.5	1258.5
L		320.5	370.5	420.5	470.5	520.5	570.5	620.5	670.5	720.5	770.5	820.5	870.5	920.5	970.5	1020.5	1070.5	1120.5	1170.5	1220.5	1270.5	1320.5	1370.5	1420.5	1470.5	1520.5
A		100	50	100	50	100	50	100	50	100	50	100	50	100	50	100	50	100	50	100	50	100	50	100	50	100
M		1	2	2	3	3	4	4	5	5	6	6	7	7	8	8	9	9	10	10	11	11	12	12	13	13
N		6	8	8	10	10	12	12	14	14	16	16	18	18	20	20	22	22	24	24	26	26	28	28	30	30
P		100	150	200	250	300	350	400	450	500	550	600	650	700	750	800	850	900	950	1000	1050	1100	1150	1200	1250	1300
KG※1		5.21	5.56	5.91	6.56	6.91	7.26	7.61	7.96	8.31	8.66	9.01	9.36	9.71	10.06	10.41	10.76	11.11	11.46	11.81	12.16	12.51	12.86	13.21	13.56	13.91
Linear Speed mm/s	Lead 5	300														275	250	225	200	175	167	158	142	133	125	117
	Lead 10	600														550	500	450	400	350	333	317	283	267	250	233
	Lead 20	1200														1100	1000	900	800	700	667	633	567	533	500	467
	Lead 32	1920														1760	1600	1440	1280	1120	1067	1013	907	853	800	747

※2 When the stroke is 50mm, if fixing the body from the top to the bottom, the fixing hole will be blocked by slider and only can be uses 4 screws to fix;as a result, suggest that fixing actuator body from the bottom to the top.
*When sensor select is D4(Origin sensor is placed at Holder end), vacuum pressure connector is installed on opposite side.

GCH5S

▶ Integrated Linear Bearing ▶ Ball Screw Drive

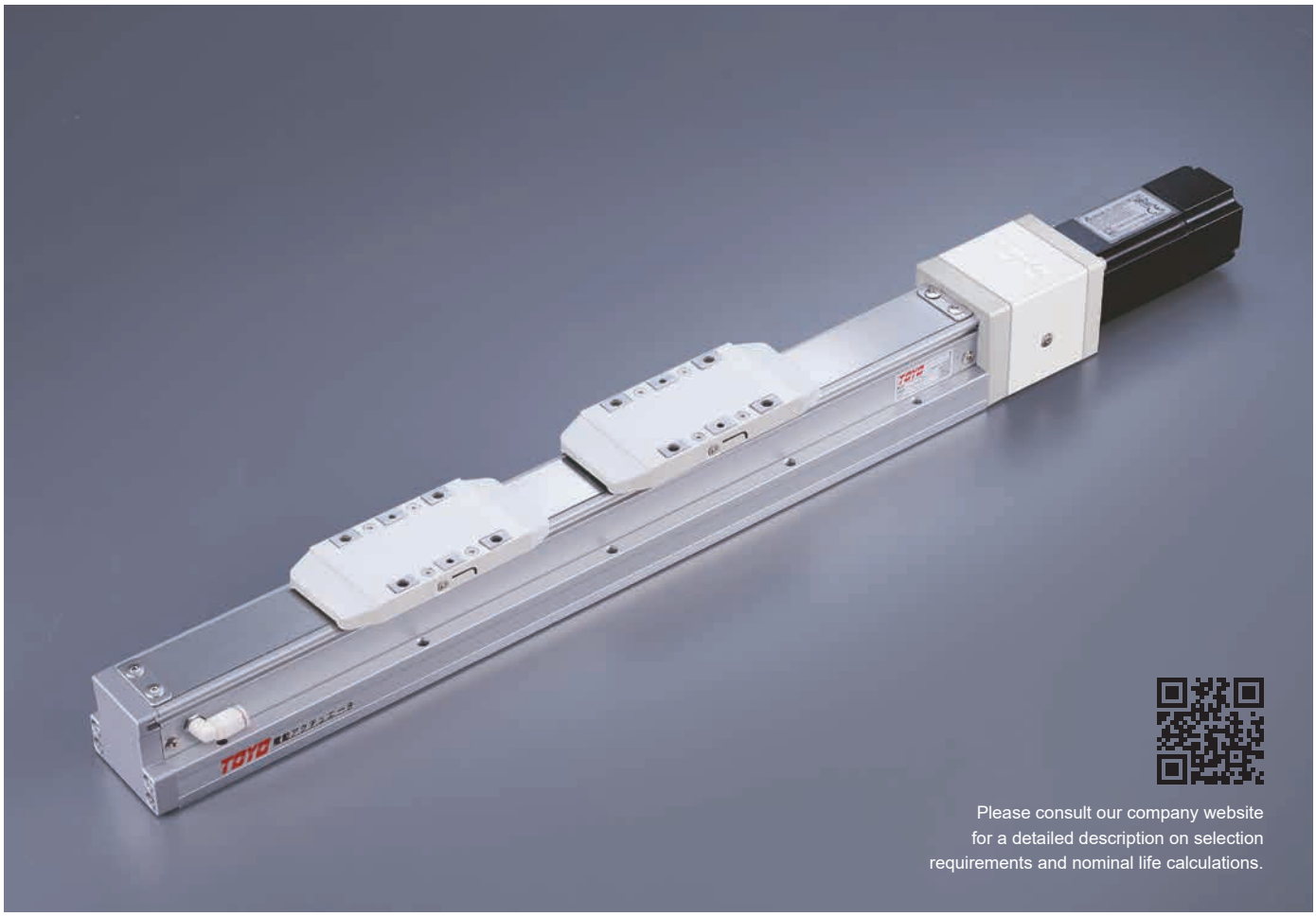

Please consult our company website for a detailed description on selection requirements and nominal life calculations.

Ordering Method

GCH5S - L2 - 100 - BC - M10B - C4 - 0001

Model | **Special Order No.**

Ball Screw Lead

2	2mm

*Dual carriage synchronous movement in reverse direction can only fit at lead of 2mm.

Stroke

25-450mm
25mm increments

Motor Position

BC	Motor Exposed
BM	Motor Bottom Side
BL	Motor Left Side
BR	Motor Right Side
- *4	No Motor Position

Attachment kit for motor

With Attachment kit				
M	Mitsubishi	05	-	B*3
P	Panasonic	10	100W	
Y	Yaskawa	20	-	
T	Delta	40	-	
42M500	42□ Shaft Ø5			
42M500A	42□ Shaft Ø5 *2			
57M635	57□ Shaft Ø6.35			
57M800	57□ Shaft Ø8			
X	Others *1			
Without Attachment kit				
K	No Motor Flange & Coupling *4			

*1 When choosing non-standard motor X, the motor spec must be provided and confirmed by TOYO for installation before the order is established.
*2 Please refer to description on page 465.
*3 If No Brake,No Description.
*4 When K is selected the motor position section is left blank.

Home Sensor

Outside	
C	Motor Side
D	Opposite Motor Side
No Sensor	
E	No Sensor

*When the stroke is 25/50/75mm, the sensor installation has the following restrictions:
1.The home sensor and the limit sensor must be installed on different sides of the body.
2.The sensor trigger device must be installed on both sides of the device.

Limit Sensor

Outside	
3	1 Pc
4	2 Pc
No Sensor	
5	No Sensor

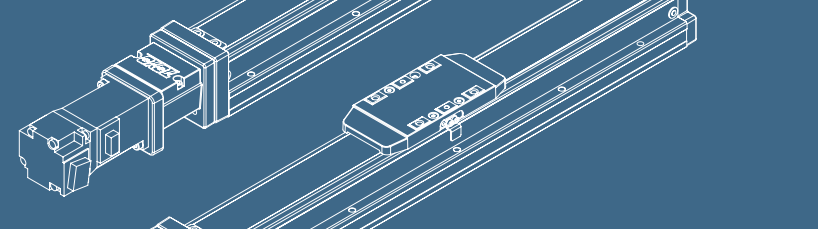

Specification

Item					
	Ball screw	Outer dia. & Precision grade		mm	ø12 & C7 Rolled Ballscrews
		Lead		mm	2
		Maximum Rotating speed※1		rpm	3000
		Maximum linear speed※1		mm/s	100
		Basic dynamic load rating Ca		N	2411
		Basic static load rating Coa		N	5779
		Load factor			1.2
	Linear Guide	Dynamic horizontal	100 Km of travel	N	5904
			1000 Km of travel	N	2736
			10000 Km of travel	N	1275
		Static horizontal		N	16904
	Fixed bearing	Basic dynamic load rating Cr		N	1730
		Static load rating Cor		N	3800
	Common Spec	Repeatability		mm	±0.005
		Start torpue		N.cm	7
		Allowable input torque		N.m	1.1
		Maximum acceleration		m/s^2	10
		Friction coefficient			0.03
		Stroke (increments)		mm	25-450 (25 increments)
		Ambient temperature※2		°C	0~+40

※1 The maximum rotating and linear speed has changed due to differences in the lead. The ball screw has a slightly axial runout with a longer stroke and the speed must turn down. (Please read the diagram below for dimensions of the linear speed)
※2 For extreme temperatures: -20C ~80C special greases are required.

Static Loading Moment

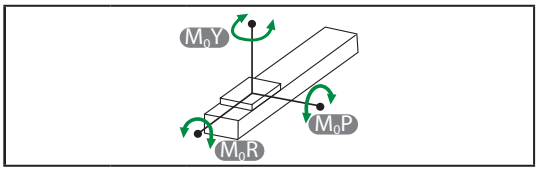

M_0Y	N.m	103
M_0P	N.m	103
M_0R	N.m	144

Dynamic Loading Moment

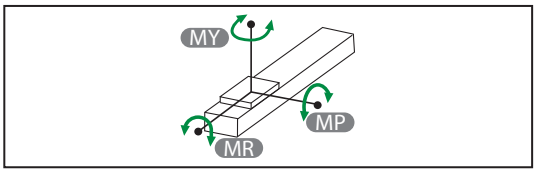

Travel	km	100	1000	10000
MY	N.m	40.8	18.9	8.8
MP	N.m	40.8	18.9	8.8
MR	N.m	58.5	27.2	12.6

Parts list

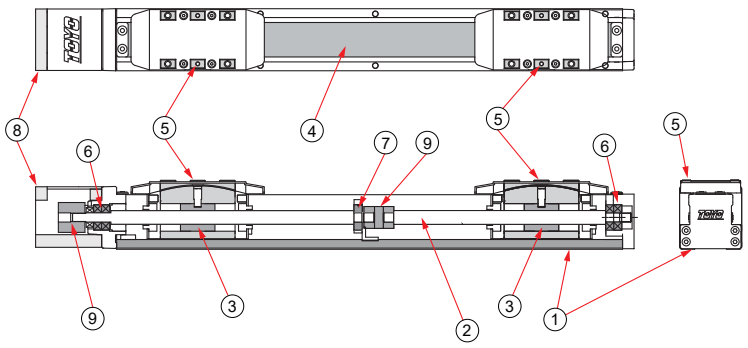

No.	Part Description	Material
1	Base Extrusion	AL6463
2	Ball Screw	S45C
3	Ball Screw Nut	S45C
4	Steel Band	SUS430
5	Carriage	SNCM21H
6	Ball Bearing Dual Arrangement	SUJ2
7	Ball Bearing	SUJ2
8	Fixed Support Block-Inline Motor Mounting Bracket	AL6061
9	Coupling- Clamping	AL6061

BC Motor Inside

2D CAD 3D CAD

Download CAD data at www.toyorobot.com

Unit : mm

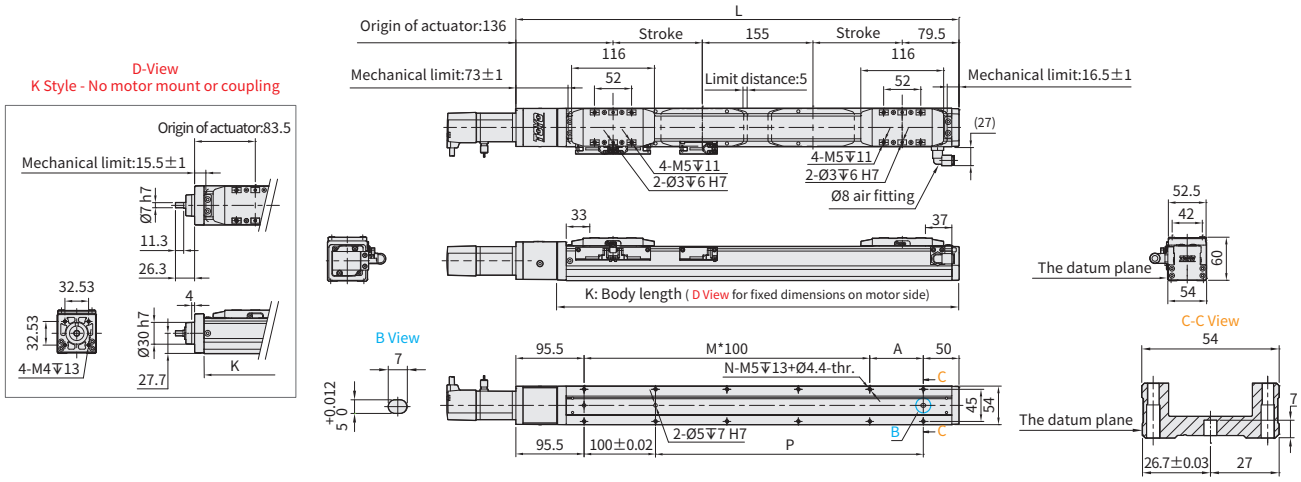

Stroke		25	50	75	100	125	150	175	200	225	250	275	300	325	350	375	400	425	450
Limit Stroke (±1)		35	60	85	110	135	160	185	210	235	260	285	310	335	360	385	410	435	460
L		420.5	470.5	520.5	570.5	620.5	670.5	720.5	770.5	820.5	870.5	920.5	970.5	1020.5	1070.5	1120.5	1170.5	1220.5	1270.5
A		75	25	75	25	75	25	75	25	75	25	75	25	75	25	75	25	75	25
M		2	3	3	4	4	5	5	6	6	7	7	8	8	9	9	10	10	11
N		8	10	10	12	12	14	14	16	16	18	18	20	20	22	22	24	24	26
P		175	225	275	325	375	425	475	525	575	625	675	725	775	825	875	925	975	1025
KG※1		3.12	3.31	3.51	3.71	3.9	4.1	4.3	4.49	4.69	4.89	5.08	5.28	5.48	5.68	5.88	6.08	6.28	6.48
K		363	413	463	513	563	613	663	713	763	813	863	913	963	1013	1063	1113	1163	1213
Linear Speed mm/s	Lead 2	100																	

※1 KG refers to the weight with motor related accessories (excluding motor), not corresponding to K Type.
*When sensor select is D4(Origin sensor is placed at Holder end), vacuum pressure connector is installed on opposite side.

BM Motor Bottom Side

2D CAD 3D CAD

Download CAD data at www.toyorobot.com

Unit : mm

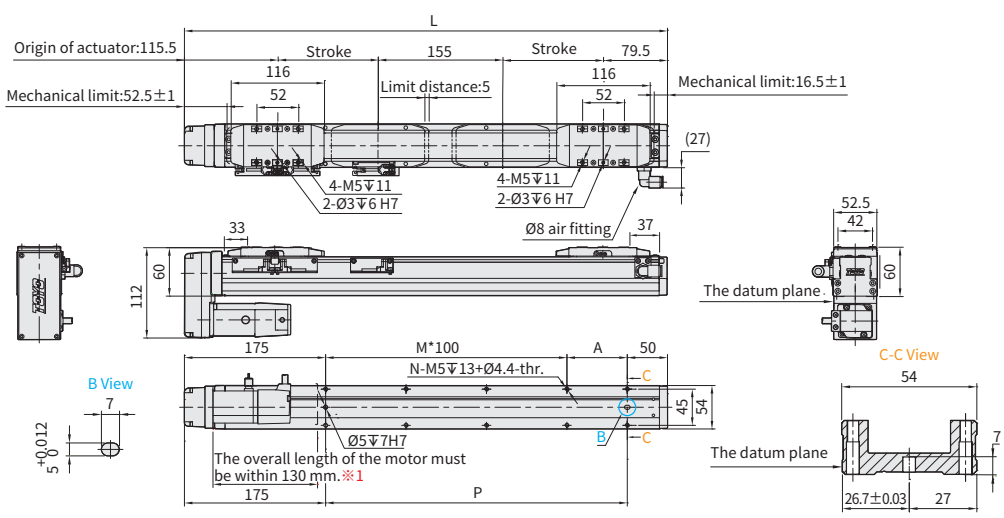

Stroke		25	50	75	100	125	150	175	200	225	250	275	300	325	350	375	400	425	450
Limit Stroke (±1)		35	60	85	110	135	160	185	210	235	260	285	310	335	360	385	410	435	460
L		400	450	500	550	600	650	700	750	800	850	900	950	1000	1050	1100	1150	1200	1250
A		75	25	75	25	75	25	75	25	75	25	75	25	75	25	75	25	75	25
M		1	2	2	3	3	4	4	5	5	6	6	7	7	8	8	9	9	10
N		6	8	8	10	10	12	12	14	14	16	16	18	18	20	20	22	22	24
P		175	225	275	325	375	425	475	525	575	625	675	725	775	825	875	925	975	1025
KG※1		3.29	3.48	3.68	3.88	4.07	4.27	4.47	4.66	4.86	5.06	5.25	5.45	5.65	5.85	6.05	6.25	6.45	6.65
Linear Speed mm/s	Lead 2	100																	

※1 When motor with brake assembled on lower side, or the total length over than spec limit, it may not use standard pinhole. Please contact our sales department if you need more information & requirement.
*When sensor select is D4(Origin sensor is placed at Holder end), vacuum pressure connector is installed on opposite side.

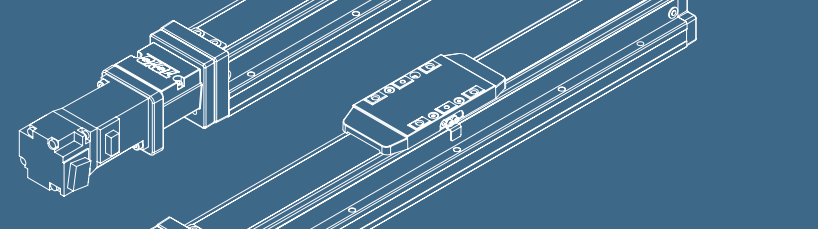

BL Motor Left Side

2D CAD 3D CAD Download CAD data at www.toyorobot.com

Unit : mm

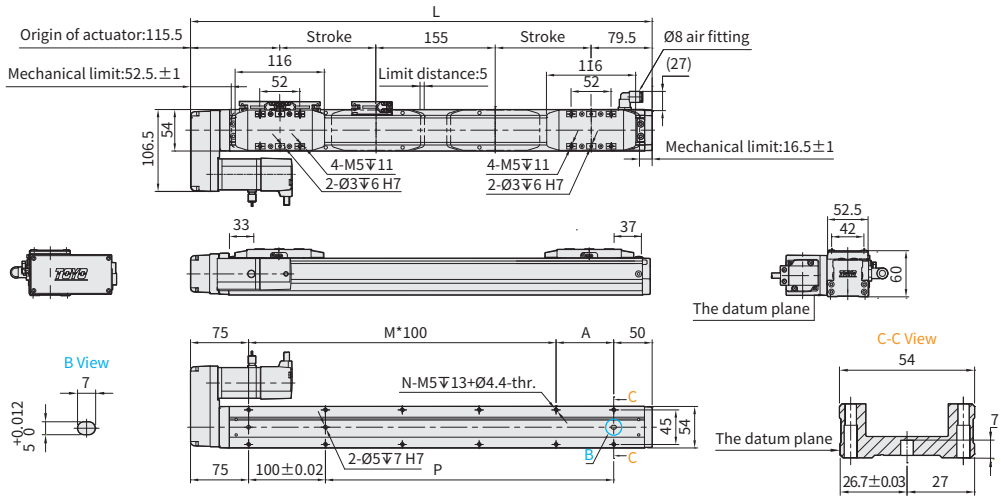

Stroke	25	50	75	100	125	150	175	200	225	250	275	300	325	350	375	400	425	450
Limit Stroke (±1)	35	60	85	110	135	160	185	210	235	260	285	310	335	360	385	410	435	460
L	400	450	500	550	600	650	700	750	800	850	900	950	1000	1050	1100	1150	1200	1250
A	75	25	75	25	75	25	75	25	75	25	75	25	75	25	75	25	75	25
M	2	3	3	4	4	5	5	6	6	7	7	8	8	9	9	10	10	11
N	8	10	10	12	12	14	14	16	16	18	18	20	20	22	22	24	24	26
P	175	225	275	325	375	425	475	525	575	625	675	725	775	825	875	925	975	1025
KG※1	3. 29	3. 48	3. 68	3. 88	4. 07	4. 27	4. 47	4. 66	4. 86	5. 06	5. 25	5. 45	5. 65	5. 85	6. 05	6. 25	6. 45	6. 65
Linear Speed mm/s — Lead 2	100																	

*When sensor select is D4(Origin sensor is placed at Holder end), vacuum pressure connector is installed on opposite side.

BR Motor Right Side

2D CAD 3D CAD Download CAD data at www.toyorobot.com

Unit : mm

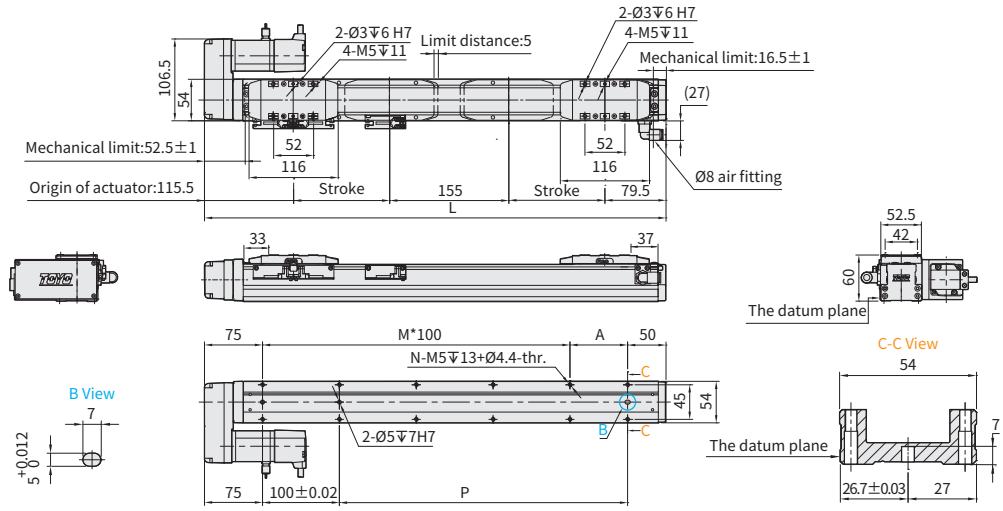

Stroke	25	50	75	100	125	150	175	200	225	250	275	300	325	350	375	400	425	450
Limit Stroke (±1)	35	60	85	110	135	160	185	210	235	260	285	310	335	360	385	410	435	460
L	400	450	500	550	600	650	700	750	800	850	900	950	1000	1050	1100	1150	1200	1250
A	75	25	75	25	75	25	75	25	75	25	75	25	75	25	75	25	75	25
M	2	3	3	4	4	5	5	6	6	7	7	8	8	9	9	10	10	11
N	8	10	10	12	12	14	14	16	16	18	18	20	20	22	22	24	24	26
P	175	225	275	325	375	425	475	525	575	625	675	725	775	825	875	925	975	1025
KG※1	3. 29	3. 48	3. 68	3. 88	4. 07	4. 27	4. 47	4. 66	4. 86	5. 06	5. 25	5. 45	5. 65	5. 85	6. 05	6. 25	6. 45	6. 65
Linear Speed mm/s — Lead 2	100																	

*When sensor select is D4(Origin sensor is placed at Holder end), vacuum pressure connector is installed on opposite side.

GCH8S

▶ Integrated Linear Bearing ▶ Ball Screw Drive

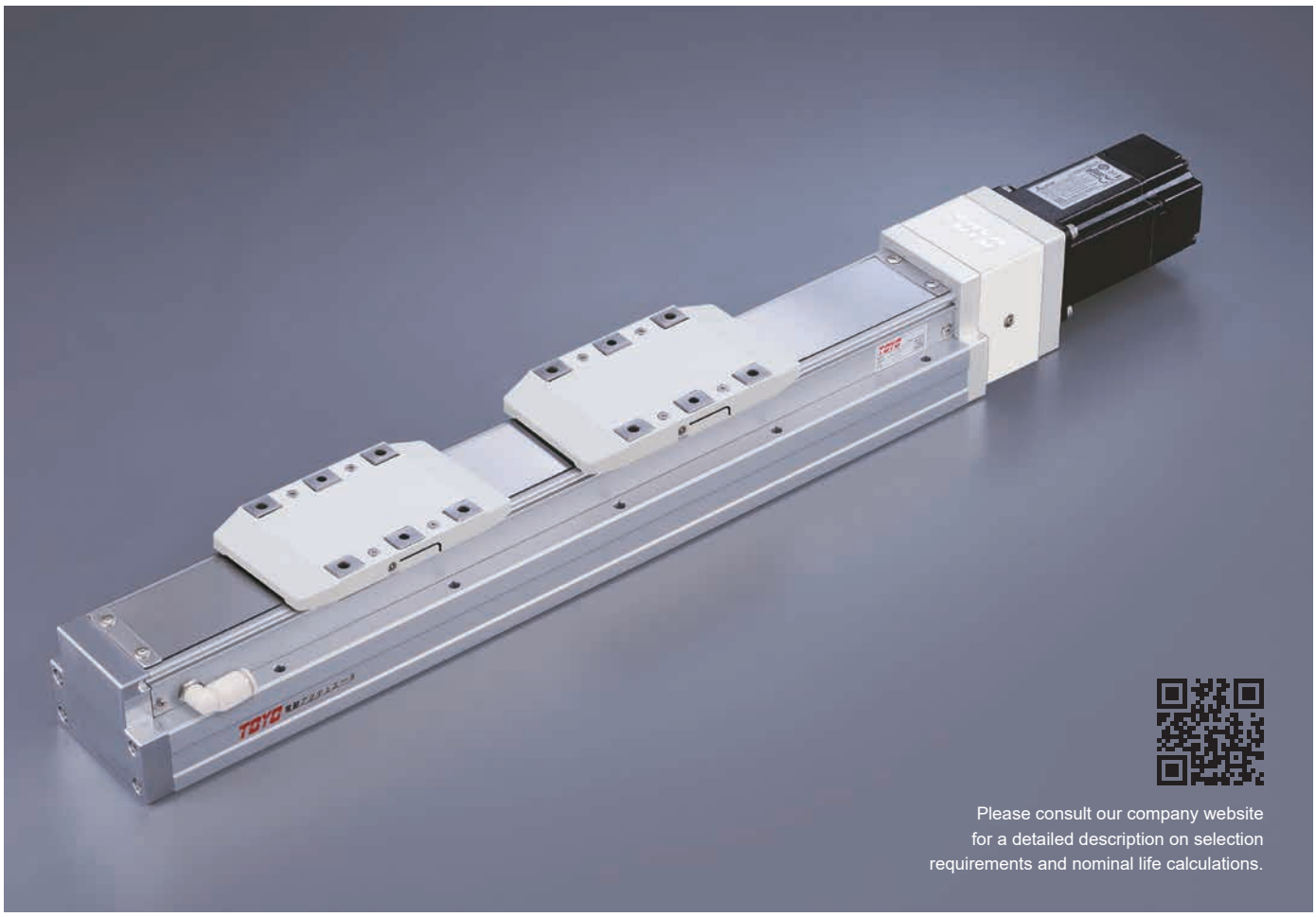

Please consult our company website for a detailed description on selection requirements and nominal life calculations.

Ordering Method

GCH8S - L5 - 100 - BC - M20B - C4 - 0001

Model | **Special Order No.**

Ball Screw Lead

5	5mm

*Dual carriage synchronous movement in reverse direction can only fit at lead of 5mm.

Stroke

25-525mm
25mm increments

Motor Position

BC	Motor Exposed
BM	Motor Bottom Side
BL	Motor Left Side
BR	Motor Right Side
- *2	No Motor Position

Attachment kit for motor

With Attachment kit				
M	Mitsubishi	05	–	B*3
P	Panasonic	10	–	
Y	Yaskawa	20	200W	
T	Delta	40	–	
57M635	57□ Shaft Ø6.35			
57M800	57□ Shaft Ø8			
X	Others *1			
Without Attachment kit				
K	No Motor Flange & Coupling *2			

*1 When choosing non-standard motor X, the motor spec must be provided and confirmed by TOYO for installation before the order is established.

*2 When K is selected the motor position section is left blank.

*3 If No Brake,No Description.

Home Sensor

Outside	
C	Motor Side
D	Opposite Motor Side
No Sensor	
E	No Sensor

*When the stroke is 25/50/75mm, the sensor installation has the following restrictions:

1.The home sensor and the limit sensor must be installed on different sides of the body.

2.The sensor trigger device must be installed on both sides of the device.

Limit Sensor

Outside	
3	1 Pc
4	2 Pc
No Sensor	
5	No Sensor

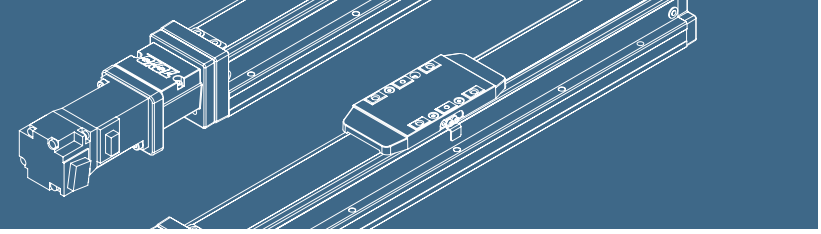

Specification

Item					
	Ball screw	Outer dia. & Precision grade		mm	ø16 & C7 Rolled Ballscrews
		Lead		mm	5
		Maximum Rotating speed※1		rpm	3600
		Maximum linear speed※1		mm/s	300
		Basic dynamic load rating Ca		N	8042
		Basic static load rating Coa		N	15088
		Load factor			1.2
	Linear Guide	Dynamic horizontal	100 Km of travel	N	18620
			1000 Km of travel	N	8643
			10000 Km of travel	N	4012
		Static horizontal		N	34230
	Fixed bearing	Basic dynamic load rating Cr		N	2600
		Static load rating Cor		N	4750
	Common Spec	Repeatability		mm	±0.005
		Start torpue		N.cm	10
		Allowable input torque		N.m	2.2
		Maximum acceleration		m/s^2	10
		Friction coefficient			0.03
		Stroke (increments)		mm	25-525 (25 increments)
		Ambient temperature※2		°C	0~+40

※1 The maximum rotating and linear speed has changed due to differences in the lead. The ball screw has a slightly axial runout with a longer stroke and the speed must turn down. (Please read the diagram below for dimensions of the linear speed)
※2 For extreme temperatures: -20C ~80C special greases are required.

Static Loading Moment

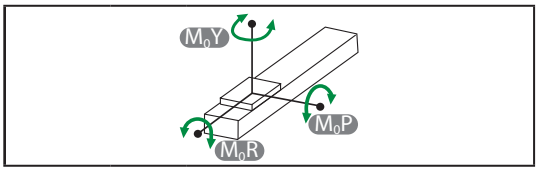

M_0Y	N.m	318
M_0P	N.m	318
M_0R	N.m	626

Dynamic Loading Moment

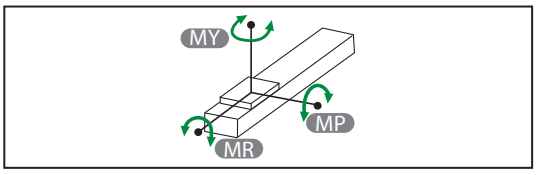

Travel	km	100	1000	10000
MY	N.m	121.6	56.5	26.2
MP	N.m	121.6	56.5	26.2
MR	N.m	201.9	93.7	43.5

Parts list

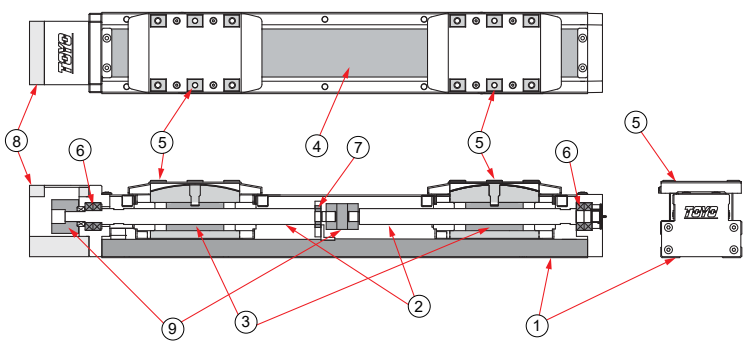

No.	Part Description	Material
1	Base Extrusion	AL6463
2	Ball Screw	S45C
3	Ball Screw Nut	S45C
4	Steel Band	SUS430
5	Carriage	SNCM21H
6	Ball Bearing Dual Arrangement	SUJ2
7	Ball Bearing	SUJ2
8	Fixed Support Block-Inline Motor Mounting Bracket	AL6061
9	Coupling- Clamping	AL6061

GCH8S

▶ Integrated Linear Bearing ▶ Ball Screw Drive

BC Motor Inside

2D CAD 3D CAD Download CAD data at www.toyorobot.com

Unit : mm

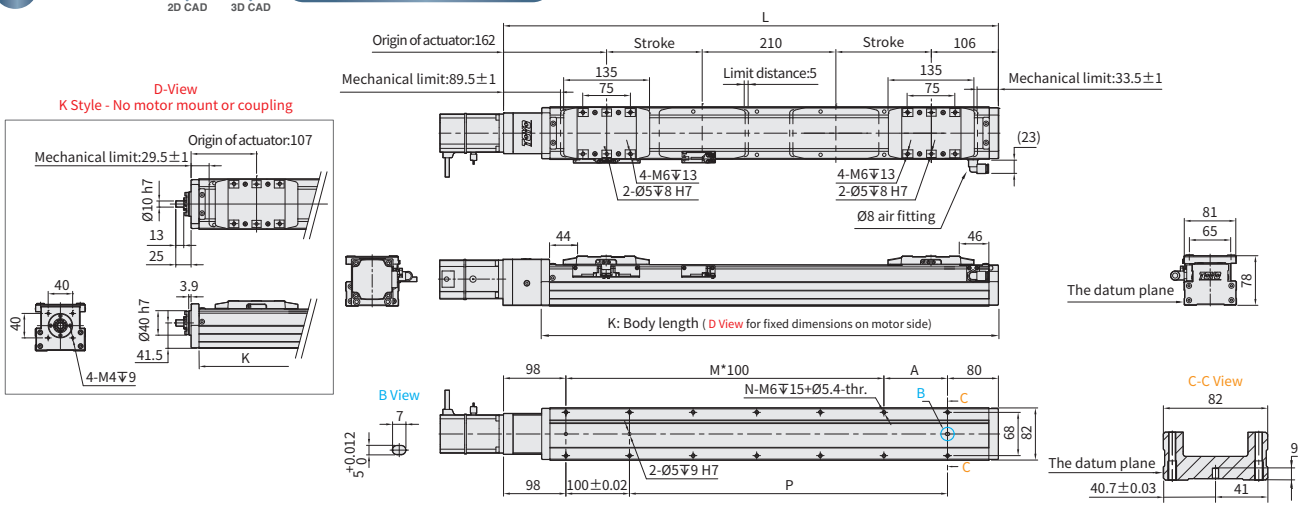

Stroke	25	50	75	100	125	150	175	200	225	250	275	300	325	350	375	400	425	450	475	500	525
Limit Stroke (±1)	35	60	85	110	135	160	185	210	235	260	285	310	335	360	385	410	435	460	485	510	535
L	528	578	628	678	728	778	828	878	928	978	1028	1078	1128	1178	1228	1278	1328	1378	1428	1478	1528
A	50	100	50	100	50	100	50	100	50	100	50	100	50	100	50	100	50	100	50	100	50
M	3	3	4	4	5	5	6	6	7	7	8	8	9	9	10	10	11	11	12	12	13
N	10	10	12	12	14	14	16	16	18	18	20	20	22	22	24	24	26	26	28	28	30
P	250	300	350	400	450	500	550	600	650	700	750	800	850	900	950	1000	1050	1100	1150	1200	1250
KG※1	6. 94	7. 3	7. 67	8. 03	8. 4	8. 76	9. 13	9. 49	9. 86	10. 22	10. 59	10. 95	11. 32	11. 68	12. 05	12. 41	12. 78	13. 15	13. 52	13. 89	14. 26
K	468	518	568	618	668	718	768	818	868	918	968	1018	1068	1118	1168	1218	1268	1318	1368	1418	1468
Linear Speed mm/s — Lead 5	300																				

※1 KG refers to the weight with motor related accessories (excluding motor), not corresponding to K Type.
*When sensor select is D4(Origin sensor is placed at Holder end), vacuum pressure connector is installed on opposite side.

BM Motor Bottom Side

2D CAD 3D CAD Download CAD data at www.toyorobot.com

Unit : mm

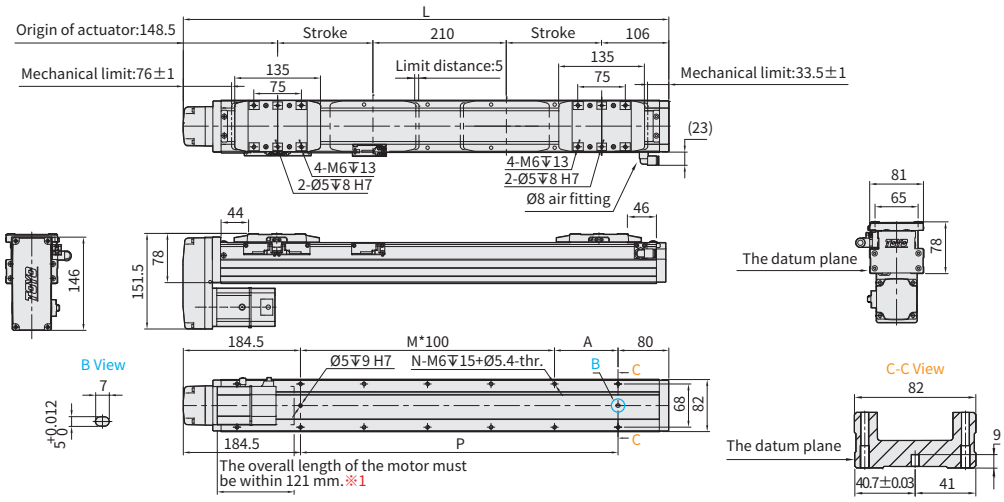

Stroke	25	50	75	100	125	150	175	200	225	250	275	300	325	350	375	400	425	450	475	500	525
Limit Stroke (±1)	35	60	85	110	135	160	185	210	235	260	285	310	335	360	385	410	435	460	485	510	535
L	514. 5	564. 5	614. 5	664. 5	714. 5	764. 5	814. 5	864. 5	914. 5	964. 5	1014. 5	1064. 5	1114. 5	1164. 5	1214. 5	1264. 5	1314. 5	1364. 5	1414. 5	1464. 5	1514. 5
A	50	100	50	100	50	100	50	100	50	100	50	100	50	100	50	100	50	100	50	100	50
M	2	2	3	3	4	4	5	5	6	6	7	7	8	8	9	9	10	10	11	11	12
N	8	8	10	10	12	12	14	14	16	16	18	18	20	20	22	22	24	24	26	26	28
P	250	300	350	400	450	500	550	600	650	700	750	800	850	900	950	1000	1050	1100	1150	1200	1250
KG※1	7. 46	7. 98	8. 5	9. 02	9. 54	10. 06	10. 58	11. 1	11. 62	12. 14	12. 66	13. 28	13. 7	14. 22	14. 74	15. 26	15. 78	16. 3	16. 82	17. 34	17. 86
Linear Speed mm/s — Lead 5	300																				

※1 When motor with brake assembled on lower side, or the total length over than spec limit, it may not use standard pinhole. Please contact our sales department if you need more information & requirement.
*When sensor select is D4(Origin sensor is placed at Holder end), vacuum pressure connector is installed on opposite side.

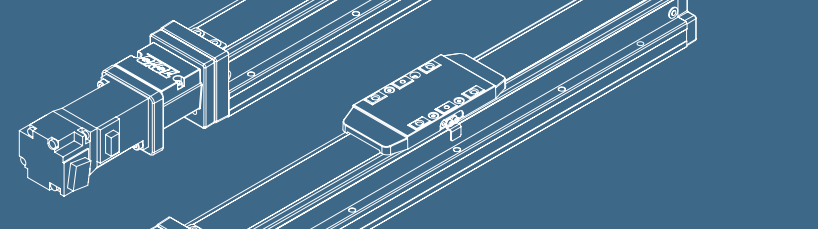

BL Motor Left Side

2D CAD 3D CAD Download CAD data at www.toyorobot.com

Unit : mm

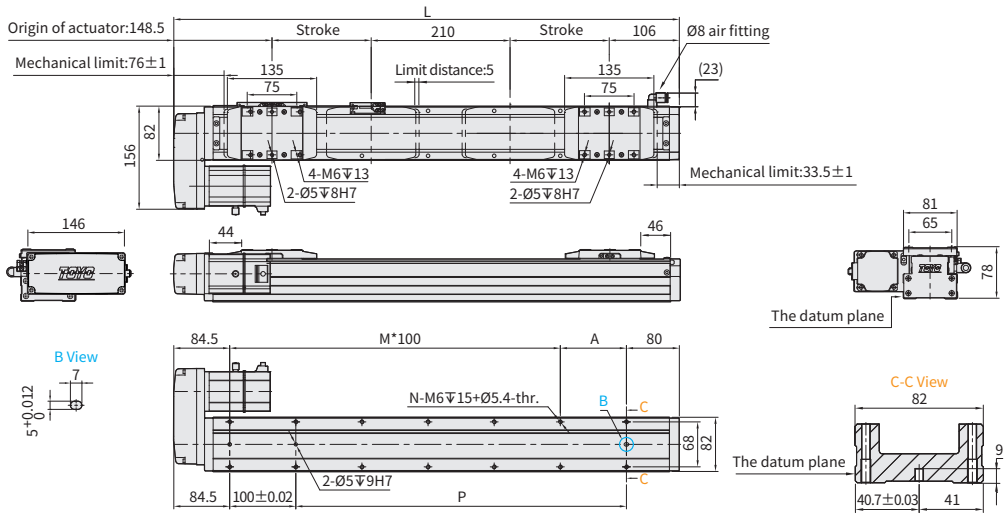

Stroke	25	50	75	100	125	150	175	200	225	250	275	300	325	350	375	400	425	450	475	500	525
Limit Stroke (±1)	35	60	85	110	135	160	185	210	235	260	285	310	335	360	385	410	435	460	485	510	535
L	514.5	564.5	614.5	664.5	714.5	764.5	814.5	864.5	914.5	964.5	1014.5	1064.5	1114.5	1164.5	1214.5	1264.5	1314.5	1364.5	1414.5	1464.5	1514.5
A	50	100	50	100	50	100	50	100	50	100	50	100	50	100	50	100	50	100	50	100	50
M	3	3	4	4	5	5	6	6	7	7	8	8	9	9	10	10	11	11	12	12	13
N	10	10	12	12	14	14	16	16	18	18	20	20	22	22	24	24	26	26	28	28	30
P	250	300	350	400	450	500	550	600	650	700	750	800	850	900	950	1000	1050	1100	1150	1200	1250
KG※1	7.46	7.98	8.5	9.02	9.54	10.06	10.58	11.1	11.62	12.14	12.66	13.28	13.7	14.22	14.74	15.26	15.78	16.3	16.82	17.34	17.86
Linear Speed mm/s — Lead 5	300																				

*When sensor select is D4(Origin sensor is placed at Holder end), vacuum pressure connector is installed on opposite side.

BR Motor Right Side

2D CAD 3D CAD Download CAD data at www.toyorobot.com

Unit : mm

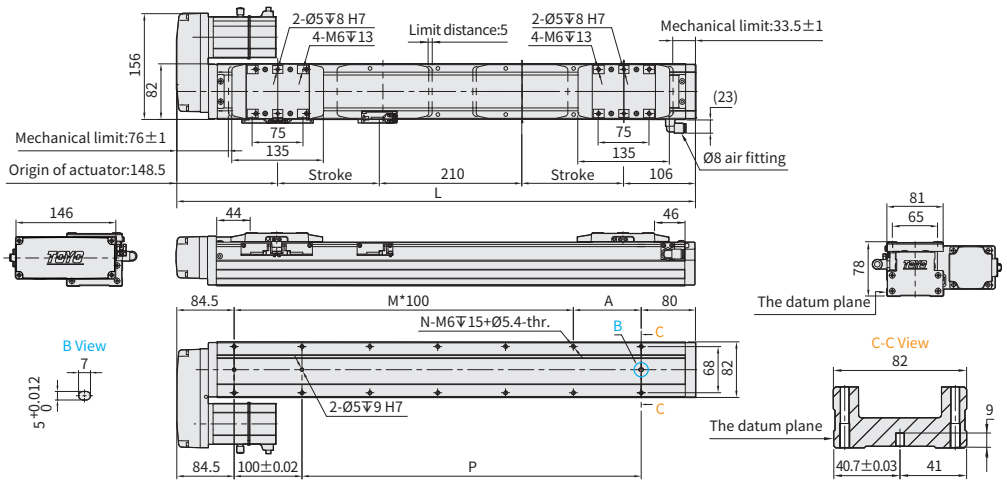

Stroke	25	50	75	100	125	150	175	200	225	250	275	300	325	350	375	400	425	450	475	500	525
Limit Stroke (±1)	35	60	85	110	135	160	185	210	235	260	285	310	335	360	385	410	435	460	485	510	535
L	514.5	564.5	614.5	664.5	714.5	764.5	814.5	864.5	914.5	964.5	1014.5	1064.5	1114.5	1164.5	1214.5	1264.5	1314.5	1364.5	1414.5	1464.5	1514.5
A	50	100	50	100	50	100	50	100	50	100	50	100	50	100	50	100	50	100	50	100	50
M	3	3	4	4	5	5	6	6	7	7	8	8	9	9	10	10	11	11	12	12	13
N	10	10	12	12	14	14	16	16	18	18	20	20	22	22	24	24	26	26	28	28	30
P	250	300	350	400	450	500	550	600	650	700	750	800	850	900	950	1000	1050	1100	1150	1200	1250
KG※1	7.46	7.98	8.5	9.02	9.54	10.06	10.58	11.1	11.62	12.14	12.66	13.28	13.7	14.22	14.74	15.26	15.78	16.3	16.82	17.34	17.86
Linear Speed mm/s — Lead 5	300																				

*When sensor select is D4(Origin sensor is placed at Holder end), vacuum pressure connector is installed on opposite side.

GCH8S

▶ Integrated Linear Bearing ▶ Ball Screw Drive

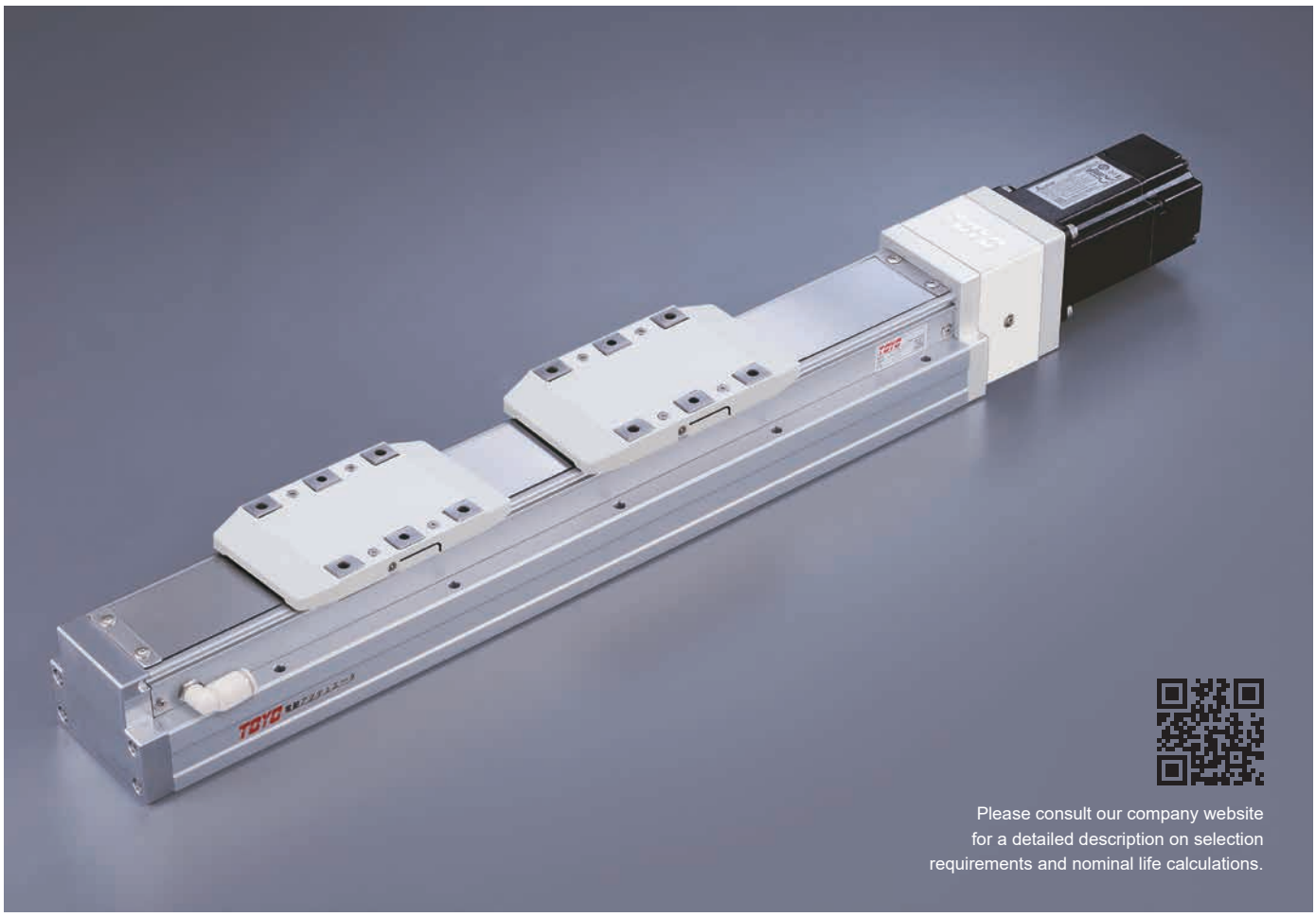

Please consult our company website for a detailed description on selection requirements and nominal life calculations.

Ordering Method

GCH8S - L5 - 100 - BC - M40B - C4 - 0001

Model | **Special Order No.**

Ball Screw Lead

5	5mm

*Dual carriage synchronous movement in reverse direction can only fit at lead of 5mm.

Stroke

25-525mm
25mm increments

Motor Position

BC	Motor Exposed
BM	Motor Bottom Side
BL	Motor Left Side
BR	Motor Right Side
- *2	No Motor Position

Attachment kit for motor

With Attachment kit				
M	Mitsubishi	05	–	B*3
P	Panasonic	10	–	
Y	Yaskawa	20	–	
T	Delta	40	400W	
57M635	57□ Shaft Ø6.35			
57M800	57□ Shaft Ø8			
X	Others *1			
Without Attachment kit				
K	No Motor Flange & Coupling *2			

*1 When choosing non-standard motor X, the motor spec must be provided and confirmed by TOYO for installation before the order is established.

*2 When K is selected the motor position section is left blank.

*3 If No Brake,No Description.

Home Sensor

Outside	
C	Motor Side
D	Opposite Motor Side
No Sensor	
E	No Sensor

*When the stroke is 25/50/75mm, the sensor installation has the following restrictions:

1.The home sensor and the limit sensor must be installed on different sides of the body.

2.The sensor trigger device must be installed on both sides of the device.

Limit Sensor

Outside	
3	1 Pc
4	2 Pc
No Sensor	
5	No Sensor

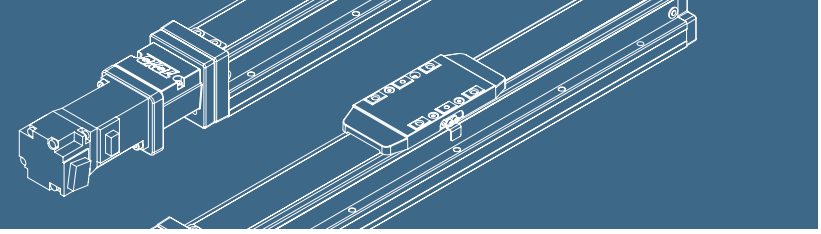

Specification

Item					
	Ball screw	Outer dia. & Precision grade		mm	ø16 & C7 Rolled Ballscrews
		Lead		mm	5
		Maximum Rotating speed※1		rpm	3600
		Maximum linear speed※1		mm/s	300
		Basic dynamic load rating Ca		N	8042
		Basic static load rating Coa		N	15088
		Load factor			1.2
	Linear Guide	Dynamic horizontal	100 Km of travel	N	18620
			1000 Km of travel	N	8643
			10000 Km of travel	N	4012
		Static horizontal		N	34230
	Fixed bearing	Basic dynamic load rating Cr		N	2600
		Static load rating Cor		N	4750
	Common Spec	Repeatability		mm	±0.005
		Start torpue		N.cm	10
		Allowable input torque		N.m	2.2
		Maximum acceleration		m/s^2	10
		Friction coefficient			0.03
		Stroke (increments)		mm	25-525 (25 increments)
		Ambient temperature※2		°C	0~+40

※1 The maximum rotating and linear speed has changed due to differences in the lead. The ball screw has a slightly axial runout with a longer stroke and the speed must turn down. (Please read the diagram below for dimensions of the linear speed)
※2 For extreme temperatures: -20C ~80C special greases are required.

Static Loading Moment

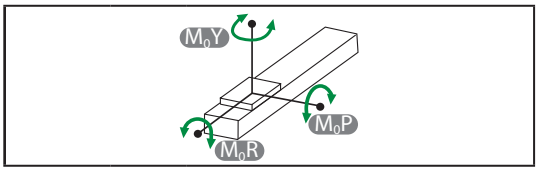

M_0Y	N.m	318
M_0P	N.m	318
M_0R	N.m	626

Dynamic Loading Moment

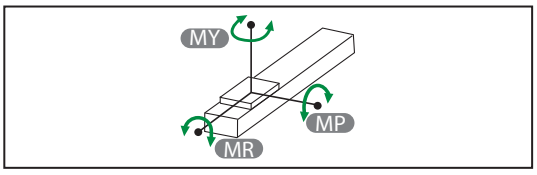

Travel	km	100	1000	10000
MY	N.m	121.6	56.5	26.2
MP	N.m	121.6	56.5	26.2
MR	N.m	201.9	93.7	43.5

Parts list

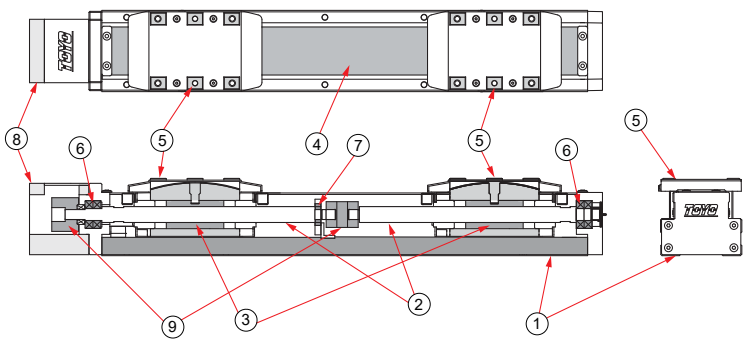

No.	Part Description	Material
1	Base Extrusion	AL6463
2	Ball Screw	S45C
3	Ball Screw Nut	S45C
4	Steel Band	SUS430
5	Carriage	SNCM21H
6	Ball Bearing Dual Arrangement	SUJ2
7	Ball Bearing	SUJ2
8	Fixed Support Block-Inline Motor Mounting Bracket	AL6061
9	Coupling- Clamping	AL6061

GCH8S

▶ Integrated Linear Bearing ▶ Ball Screw Drive

BC Motor Inside

2D CAD 3D CAD Download CAD data at www.toyorobot.com

Unit : mm

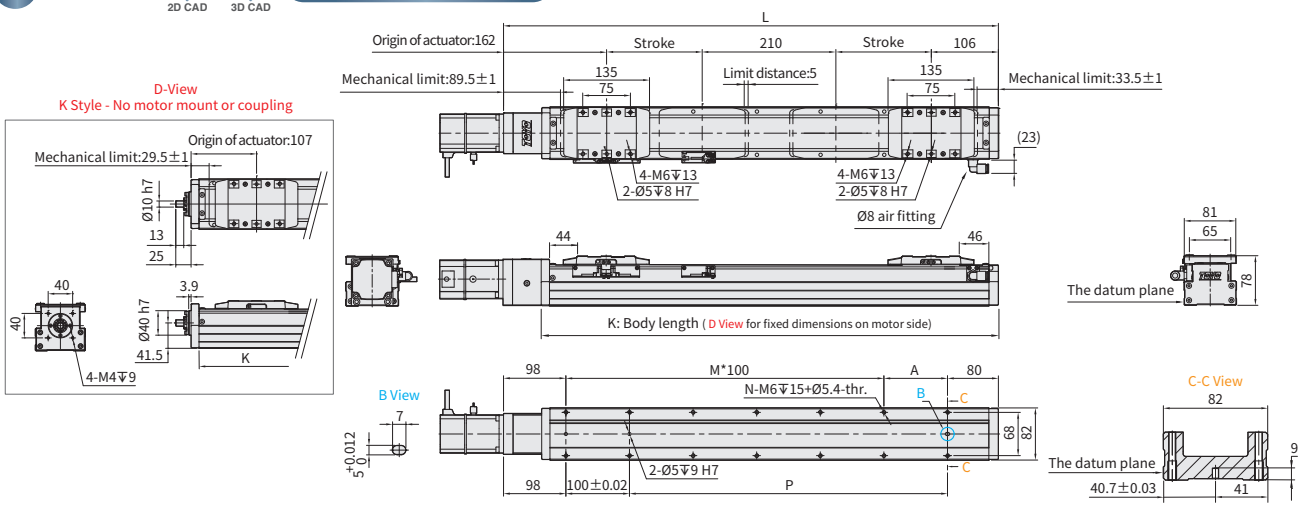

Stroke	25	50	75	100	125	150	175	200	225	250	275	300	325	350	375	400	425	450	475	500	525
Limit Stroke (±1)	35	60	85	110	135	160	185	210	235	260	285	310	335	360	385	410	435	460	485	510	535
L	528	578	628	678	728	778	828	878	928	978	1028	1078	1128	1178	1228	1278	1328	1378	1428	1478	1528
A	50	100	50	100	50	100	50	100	50	100	50	100	50	100	50	100	50	100	50	100	50
M	3	3	4	4	5	5	6	6	7	7	8	8	9	9	10	10	11	11	12	12	13
N	10	10	12	12	14	14	16	16	18	18	20	20	22	22	24	24	26	26	28	28	30
P	250	300	350	400	450	500	550	600	650	700	750	800	850	900	950	1000	1050	1100	1150	1200	1250
KG※1	6. 94	7. 3	7. 67	8. 03	8. 4	8. 76	9. 13	9. 49	9. 86	10. 22	10. 59	10. 95	11. 32	11. 68	12. 05	12. 41	12. 78	13. 15	13. 52	13. 89	14. 26
K	468	518	568	618	668	718	768	818	868	918	968	1018	1068	1118	1168	1218	1268	1318	1368	1418	1468
Linear Speed mm/s — Lead 5	300																				

※1 KG refers to the weight with motor related accessories (excluding motor), not corresponding to K Type.
*When sensor select is D4(Origin sensor is placed at Holder end), vacuum pressure connector is installed on opposite side.

BM Motor Bottom Side

2D CAD 3D CAD Download CAD data at www.toyorobot.com

Unit : mm

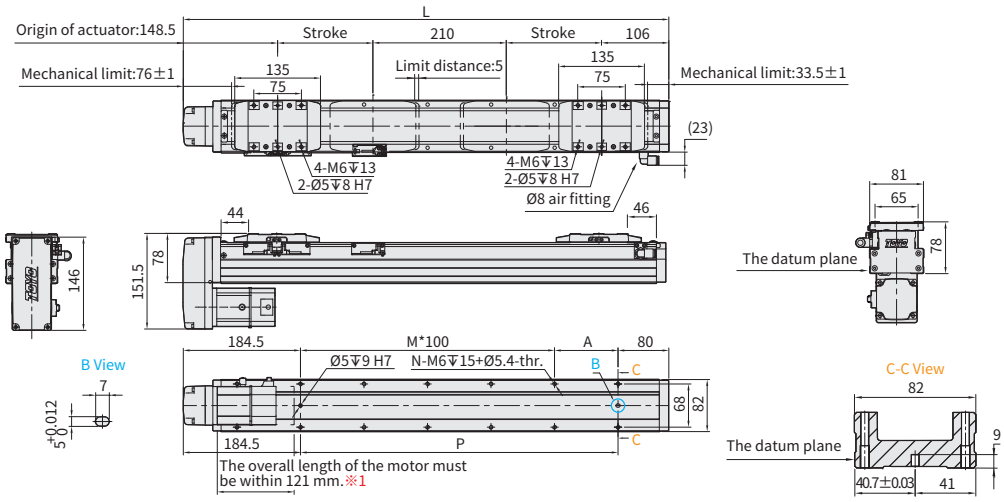

Stroke	25	50	75	100	125	150	175	200	225	250	275	300	325	350	375	400	425	450	475	500	525
Limit Stroke (±1)	35	60	85	110	135	160	185	210	235	260	285	310	335	360	385	410	435	460	485	510	535
L	514. 5	564. 5	614. 5	664. 5	714. 5	764. 5	814. 5	864. 5	914. 5	964. 5	1014. 5	1064. 5	1114. 5	1164. 5	1214. 5	1264. 5	1314. 5	1364. 5	1414. 5	1464. 5	1514. 5
A	50	100	50	100	50	100	50	100	50	100	50	100	50	100	50	100	50	100	50	100	50
M	2	2	3	3	4	4	5	5	6	6	7	7	8	8	9	9	10	10	11	11	12
N	8	8	10	10	12	12	14	14	16	16	18	18	20	20	22	22	24	24	26	26	28
P	250	300	350	400	450	500	550	600	650	700	750	800	850	900	950	1000	1050	1100	1150	1200	1250
KG※1	7. 46	7. 98	8. 5	9. 02	9. 54	10. 06	10. 58	11. 1	11. 62	12. 14	12. 66	13. 28	13. 7	14. 22	14. 74	15. 26	15. 78	16. 3	16. 82	17. 34	17. 86
Linear Speed mm/s — Lead 5	300																				

※1 When motor with brake assembled on lower side, or the total length over than spec limit, it may not use standard pinhole. Please contact our sales department if you need more information & requirement.
*When sensor select is D4(Origin sensor is placed at Holder end), vacuum pressure connector is installed on opposite side.

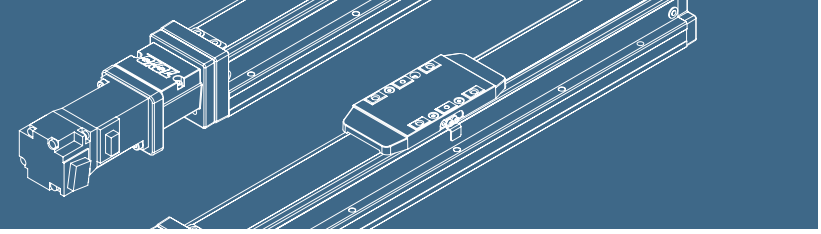

BL Motor Left Side

2D CAD 3D CAD Download CAD data at www.toyorobot.com

Unit : mm

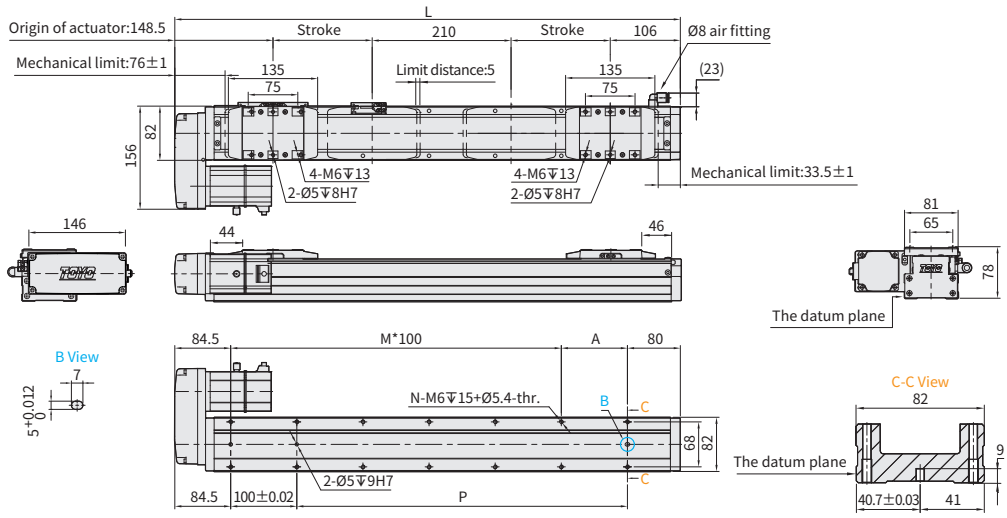

Stroke	25	50	75	100	125	150	175	200	225	250	275	300	325	350	375	400	425	450	475	500	525
Limit Stroke (±1)	35	60	85	110	135	160	185	210	235	260	285	310	335	360	385	410	435	460	485	510	535
L	514.5	564.5	614.5	664.5	714.5	764.5	814.5	864.5	914.5	964.5	1014.5	1064.5	1114.5	1164.5	1214.5	1264.5	1314.5	1364.5	1414.5	1464.5	1514.5
A	50	100	50	100	50	100	50	100	50	100	50	100	50	100	50	100	50	100	50	100	50
M	3	3	4	4	5	5	6	6	7	7	8	8	9	9	10	10	11	11	12	12	13
N	10	10	12	12	14	14	16	16	18	18	20	20	22	22	24	24	26	26	28	28	30
P	250	300	350	400	450	500	550	600	650	700	750	800	850	900	950	1000	1050	1100	1150	1200	1250
KG※1	7.46	7.98	8.5	9.02	9.54	10.06	10.58	11.1	11.62	12.14	12.66	13.28	13.7	14.22	14.74	15.26	15.78	16.3	16.82	17.34	17.86
Linear Speed mm/s — Lead 5	300																				

*When sensor select is D4(Origin sensor is placed at Holder end), vacuum pressure connector is installed on opposite side.

BR Motor Right Side

2D CAD 3D CAD Download CAD data at www.toyorobot.com

Unit : mm

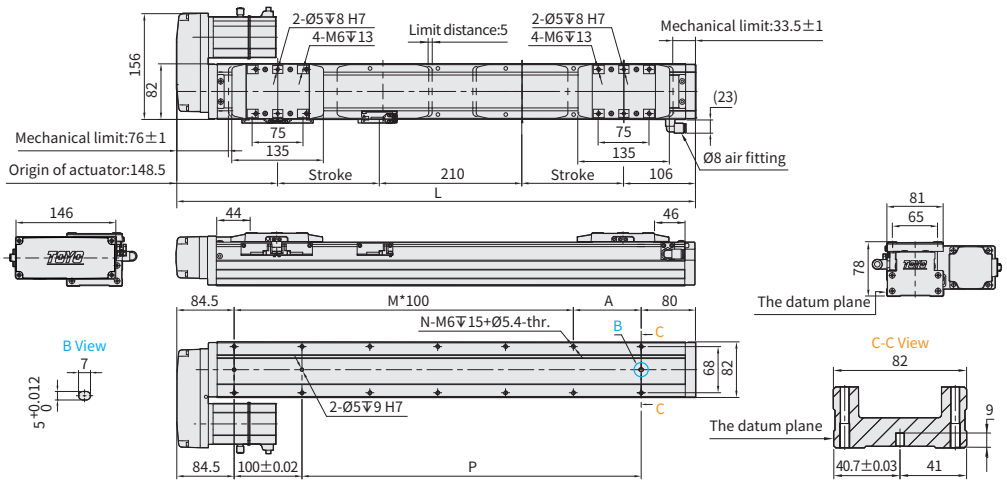

Stroke	25	50	75	100	125	150	175	200	225	250	275	300	325	350	375	400	425	450	475	500	525
Limit Stroke (±1)	35	60	85	110	135	160	185	210	235	260	285	310	335	360	385	410	435	460	485	510	535
L	514.5	564.5	614.5	664.5	714.5	764.5	814.5	864.5	914.5	964.5	1014.5	1064.5	1114.5	1164.5	1214.5	1264.5	1314.5	1364.5	1414.5	1464.5	1514.5
A	50	100	50	100	50	100	50	100	50	100	50	100	50	100	50	100	50	100	50	100	50
M	3	3	4	4	5	5	6	6	7	7	8	8	9	9	10	10	11	11	12	12	13
N	10	10	12	12	14	14	16	16	18	18	20	20	22	22	24	24	26	26	28	28	30
P	250	300	350	400	450	500	550	600	650	700	750	800	850	900	950	1000	1050	1100	1150	1200	1250
KG※1	7.46	7.98	8.5	9.02	9.54	10.06	10.58	11.1	11.62	12.14	12.66	13.28	13.7	14.22	14.74	15.26	15.78	16.3	16.82	17.34	17.86
Linear Speed mm/s — Lead 5	300																				

*When sensor select is D4(Origin sensor is placed at Holder end), vacuum pressure connector is installed on opposite side.